(H) North Side A1 1X SET OF ILLUMINATED CHANNELS

LETTER FACES : WHITE DAY - WHITE NIGHT

ÉCHELLE 1/8" = 1'-0"

Area / Sup.	329.95 sq. ft.
Weight / Poids	
Illumination	LED
Voltage	120V
LED Temp.	3000K

Couleurs / Colours

Colours may not be exactly as shown on screen. Please refer to appropriate charts for exact colours.

Les couleurs illustrées à l'écran peuvent ne pas être exactes. Veuillez vous référer aux chartes appropriées pour les couleurs exactes

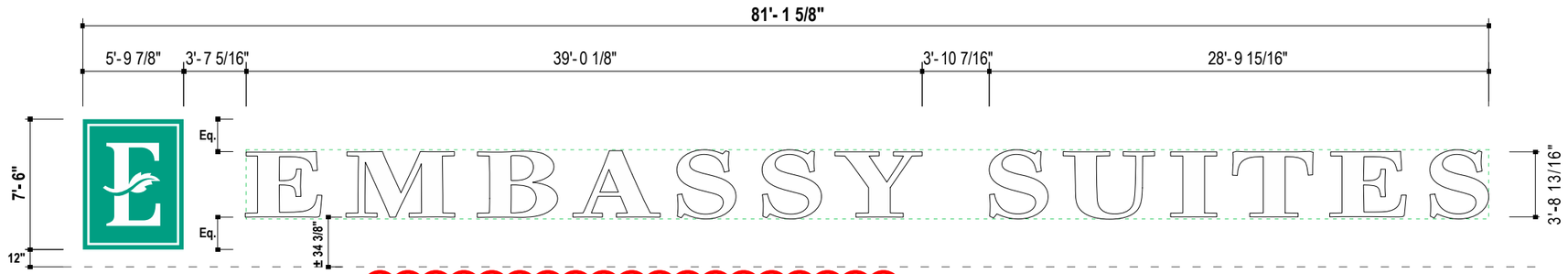

Graphic Elevation

Side View

Logo : 43.63 sq. ft.
Embassy Suite : 286.32 sq. ft.

REFER TO STRUCTURAL SEALED DRAWINGS FOR MOUNTING/ATTACHMENT METHODS TO BE USED

DESCRIPTION

LOGO :
- Made of aluminum, painted dark grey.
- White Flex face.
  Vinyl graphic on 1st surface.
- Illuminated with LEDS.

CHANNELS LETTERS:
- Made of aluminum, painted dark grey.
- White #7328 acrylic faces, 3/16" thick, dark grey trimcap.
- Illuminated with LEDS.

REVIEWED
AS NOTED HERE ON
DEPARTMENT OF CODES AND BUILDING SAFETY

THIS SET OF PLANS SHALL BE PRINTED AND AVAILABLE ON THE JOBSITE DURING CONSTRUCTION.

NOTICE: This project may be subject to the provisions of the Americans with Disabilities Act (ADA) of 1991. You should contact the ADA Hotline at 202-514-0301 before commencing work. Failure to comply may result in Federal fines and penalties.

FIRE STOPPING REQUIREMENT

Penetrations thru rated walls and floors shall be sealed with material capable of preventing the passage of flames and hot gasses when subjected to the requirements of the Test Standard specific for Fire Stops UL 1479 (ASTM E 814)

REVIEWED jkatwood DATE 10/14/2021

Permit ID Number: 2021060328 PAGE 1 OF 60

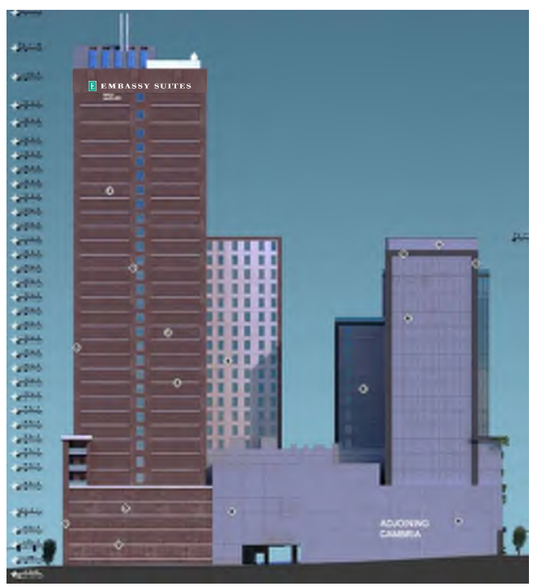

Simulation North

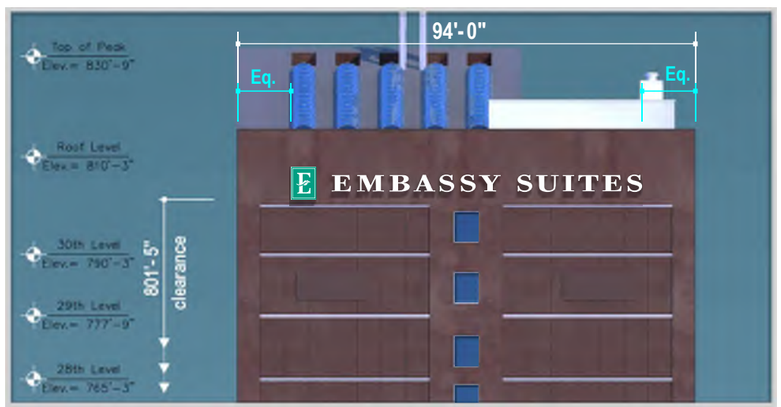

Simulation Day view

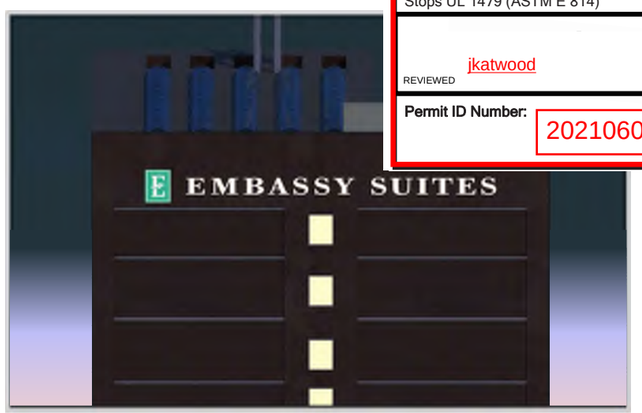

Simulation Night view

er and yellower light, colors

Survey is required before production

Client Approval / Approbation client

Signature:

Date: / / YEAR / ANNÉE MONTH / MOIS DAY / JOUR

FOR PERMITTING
POUR PERMIS

TRANSWORLD

CONTACT

9310, boul. Parkway, Montréal (Québec) H1J 1N7
T : 514.352.8030
F : 514.352.0386

info@transworldsigns.com
www.transworldsigns.com

AVIS / NOTICE

Ce dessin, incluant la conception graphique et les détails techniques, est la seule propriété d'Enseignes Transworld cie et ne peut être reproduit, copié ou utilisé pour fabrication sans l'autorisation préalable d'Enseignes Transworld cie.

This drawing, including graphic layout and technical details, is the property of Transworld Signs Co and cannot be reproduced, copied, or used without prior authorization from Transworld Signs Co.

Licence RBQ : 8270-5815-47 titulaire d'une licence délivrée en vertu de la Loi sur le bâtiment du Québec

Client	Site
Hilton Embassy	

Adr. / Add.: 710 Demonbreun Street, Nashville, TN

Date	Rep.	Des.
2020-01-06	S. Gabrisch	N. Dion

2019-03062-GDWG-A1-CHNLET

REVISIONS

01	for permit stamp	ND	2020-12-18
02	adjusted to tech drawings for permit	ND	2021-06-09
03	adjusted after meeting for permit	ND	2021-06-10
04	adjusted with tech doc for permit	ND	2021-06-18
05	adjustable space behind channels	ND	2021-08-13
06	modified as requested	ND	2021-09-03
06			
06			
06			

(D) South Side

A2 **1X**

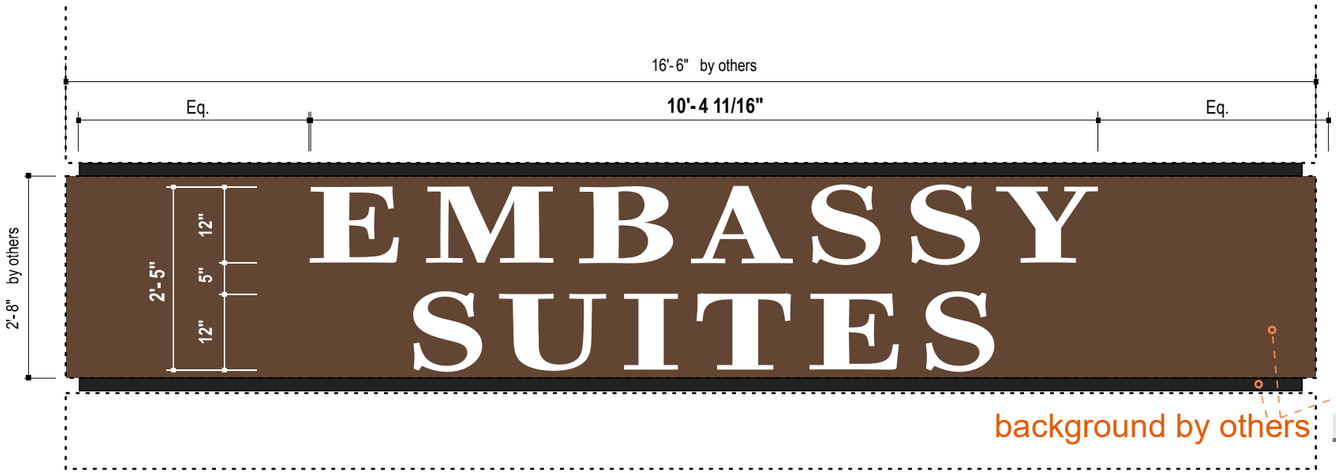

Graphic Elevation

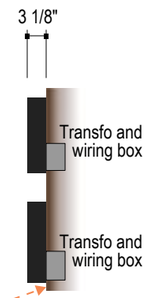

Side View

SET OF ILLUMINATED CHANNELS

LETTER FACES : WHITE DAY - WHITE NIGHT
Dark grey box sides

DESCRIPTION

Background : non illuminated
painted to match blade sign, **by others.**
Power supply, wiring and electrical outlet
at the back.

Lettering : illuminated
Returns made of aluminum, painted dark grey
Dark grey trimcap.
White acrylic faces.

Illumination with LEDs.

SCALE / ÉCH. 1/2" = 1'-0"	
Area / Sup.	illuminated letters : 25.15 sq. ft.
Weight / Poids	
Illumination	L.E.D.
Voltage	
LED Temp.	3000K

CERTIFICATIONS UL SP REQUIRED

Couleurs / Colours

Colours may not be exactly as shown on screen. Please refer to appropriate charts for exact colours.

Les couleurs illustrées à l'écran peuvent ne pas être exactes. Veuillez vous référer aux chartes appropriées pour les couleurs exactes

Simulation

Simulation

Location

Remarques / Notes

3000 k gives a warmer and yellower light, so could change the colors

Survey is required before production

Client Approval / Approbation client

Signature: _____

Date: ____ / ____ / ____
YEAR / ANNÉE MONTH / MOIS DAY / JOUR

FOR PERMITTING
POUR PERMIS

TRANSWORLD

CONTACT

9310, boul. Parkway, Montréal (Québec) H1J 1N7
T : **514.352.8030**
F : 514.352.0386

info@transworldsigns.com
www.transworldsigns.com

AVIS / NOTICE

Ce dessin, incluant la conception graphique et les détails techniques, est la seule propriété d'Enseignes Transworld cie et ne peut être reproduit, copié ou utilisé pour fabrication sans l'autorisation préalable d'Enseignes Transworld cie.

This drawing, including graphic layout and technical details, is the property of Transworld Signs Co and cannot be reproduced, copied, or used without prior authorization from Transworld Signs Co.

Licence RBQ : 8270-5815-47 titulaire d'une licence délivrée en vertu de la Loi sur le bâtiment du Québec

Client	Site
Hilton Embassy	

Adr. / Add.
710 Demonbreun Street, Nashville, TN

Date	Rep.	Des.
2020-01-06	S. Gabrisch	N. Dion

2019-03062-GDWG-A2-CHNLET

REVISIONS

01	for permit stamp	ND	2020-12-18
02	Add support structure	AA	2021-01-18
03	adjusted to tech drawings for permit	ND	2021-06-09
04	adjusted drawing after meeting for permit	ND	2021-06-10
05	adjusted to doc tech for permit	ND	2021-07-02
06	added n-lum. cabinet background, increased letters	ND	2021-08-11
07	plate background by others	ND	2021-08-13
08	adjusted clearance	ND	2021-08-25
09	modified as requested	ND	2021-09-03

(E) South Side A3 1X SET OF ILLUMINATED CHANNEL LETTERS

OPTION 1 : white faces day and night
OPTION2 : black faces at day / white faces at night

CUSTOM	SCALE / ÉCH. 1/2" = 1'-0"
Area / Sup.	44,86 sq. ft.
Weight / Poids	
Illumination	L.E.D.
Voltage du site	
LED Temp.	3000K

CERTIFICATIONS UL SP REQUIRED

Couleurs / Colours

Colours may not be exactly as shown on screen. Please refer to appropriate charts for exact colours.

Les couleurs illustrées à l'écran peuvent ne pas être exactes. Veuillez vous référer aux chartes appropriées pour les couleurs exactes

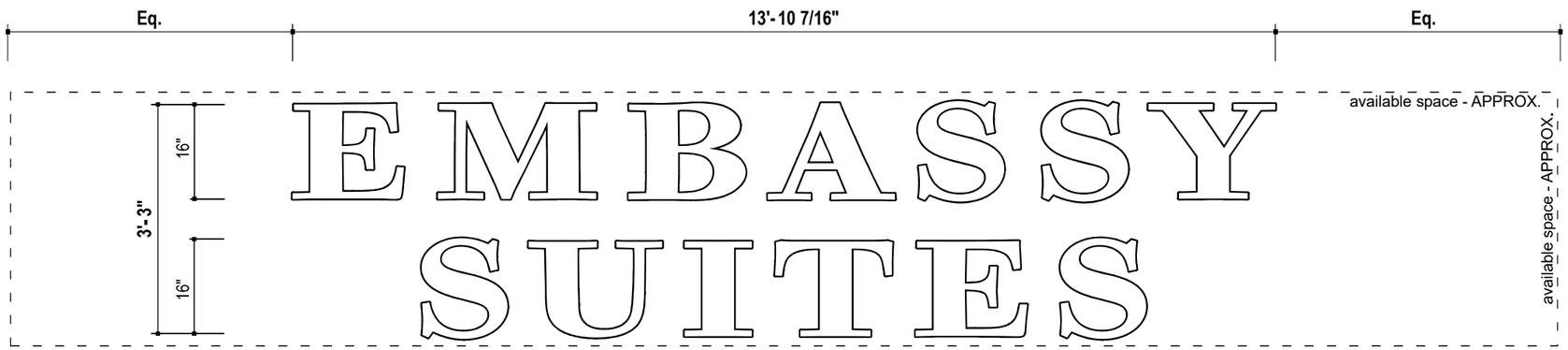

Graphic Elevation

Side View

DESCRIPTION

CHANNELS LETTERS:

- Dark grey trimcap.
- Made of aluminum, painted dark grey.
- White acrylic faces.
- White L.E.D. modules.

Simulation

Simulation

Color of the channel letters in relation to the wall color to be confirmed.

Remarques / Notes

3000 k gives a warmer and yellower light, so could change the colors

Survey is required before production

Client Approval / Approbation client

Signature:

Date: / / YEAR / ANNÉE MONTH / MOIS DAY / JOUR

FOR PERMITTING
POUR PERMIS

TRANSWORLD

CONTACT

9310, boul. Parkway, Montréal (Québec) H1J 1N7
T : **514.352.8030**
F : 514.352.0386

info@transworldsigns.com
www.transworldsigns.com

AVIS / NOTICE

Ce dessin, incluant la conception graphique et les détails techniques, est la seule propriété d'Enseignes Transworld cie et ne peut être reproduit, copié ou utilisé pour fabrication sans l'autorisation préalable d'Enseignes Transworld cie.

This drawing, including graphic layout and technical details, is the property of Transworld Signs Co and cannot be reproduced, copied, or used without prior authorization from Transworld Signs Co.

Licence RBQ : 8270-5815-47 titulaire d'une licence délivrée en vertu de la Loi sur le bâtiment du Québec

Client	Site
Hilton Embassy	

Adr. / Add.: 710 Demonbreun Street, Nashville, TN

Date	Rep.	Des.
2020-01-06	S. Gabrisch	N. Dion

2019-03062-GDWG-A3-CHNLET

REVISIONS

01	for permit stamp	ND	2020-12-18
02	modified after meeting for permit	ND	2021-06-10
03	modified with tech doc for permit	ND	2021-07-02
04	modified for permit	ND	2021-08-10
05	Increased lettres bigger than Stay Golden Coffee	ND	2021-08-12
06	Ajusted text - increased, removed logo, center, on 2 lines	ND	2021-08-13
07	Ajusted width and square ft	ND	2021-08-23
08	Ajusted clearance	ND	2021-08-25
08	Modified as requested	ND	2021-09-03

(F) South Side A6 1X SET OF ILLUMINATED CHANNEL LETTERS

SALE / ÉCHELLE 3/8" = 1'-0"

Area / Sup.	34.10 sq. ft
Weight / Poids	
Illumination	L.E.D.
Voltage	
LED Temp.	3000K

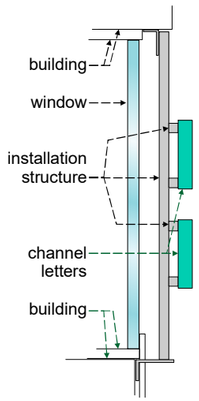

Side View

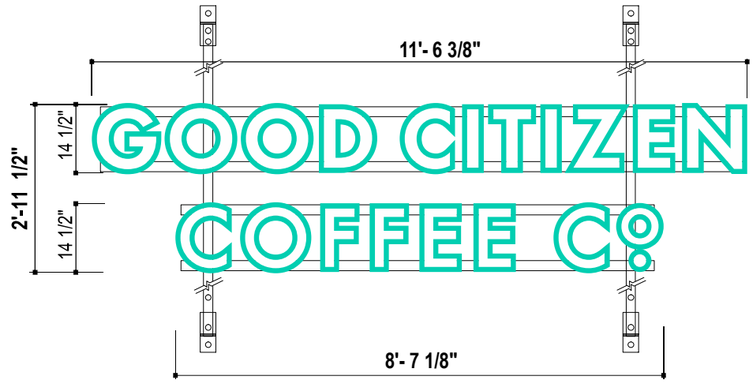

Graphic Elevation

NOTE : For details see technical drawings

DESCRIPTION

Fabicated in painted aluminum.
Backs painted same color as sides.

Trimless.
3/16" thick white #7328 acrylic faces.
Vinyl graphics on first surface (color code TBD)

Mounted on aluminum tube structure
painted to match mullions (color code TBD).

Illuminated with L.E.D.

Couleurs / Colours

Colours may not be exactly as shown on screen. Please refer to appropriate charts for exact colours.

Les couleurs illustrées à l'écran peuvent ne pas être exactes. Veuillez vous référer aux chartes appropriées pour les couleurs exactes

W4	mullions and installation structure	Colour code is require before production
		Colour code is require before production

Graphic Elevation

South Side

Remarques / Notes

3000 k gives a warmer and yellower light, so could change the colors

Survey of windows and mullions is required before production

Client Approval / Approbation client

Signature:

Date: / / (YEAR / ANNÉE, MONTH / MOIS, DAY / JOUR)

FOR PERMITTING
POUR PERMIS

TRANSWORLD

CONTACT

9310, boul. Parkway, Montréal (Québec) H1J 1N7
T : 514.352.8030
F : 514.352.0386

info@transworldsigns.com
www.transworldsigns.com

AVIS / NOTICE

Ce dessin, incluant la conception graphique et les détails techniques, est la seule propriété d'Enseignes Transworld cie et ne peut être reproduit, copié ou utilisé pour fabrication sans l'autorisation préalable d'Enseignes Transworld cie.

This drawing, including graphic layout and technical details, is the property of Transworld Signs Co and cannot be reproduced, copied, or used without prior authorization from Transworld Signs Co.

Licence RBQ : 8270-5815-47 titulaire d'une licence délivrée en vertu de la Loi sur le bâtiment du Québec

Client	Site
Hilton Embassy	

Adr. / Add.: 710 Demonbreun Street, Nashville, TN

Date	Rep.	Des.
2020-12-18	S. Gabrisch	N. Dion

2019-03062-GDWG-A6-CHAN

REVISIONS

#	Description	Des.	Date
01	Modified after meeting for perm	ND	2021-06-10
02	Modified with tech doc for perm	ND	2021-06-18
03	Changed Signature	ND	2021-08-16
04	Modified with tech doc for perm	ND	2021-08-28
05	Modified as requested	ND	2021-09-03

(B) South Side A7 1X ILLUMINATED SIGN

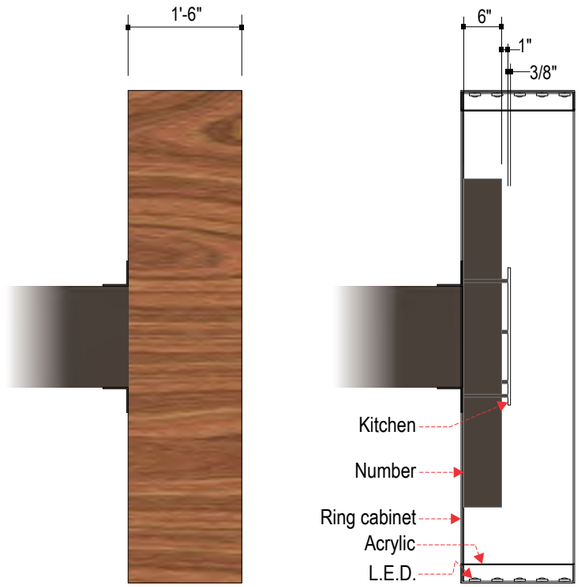

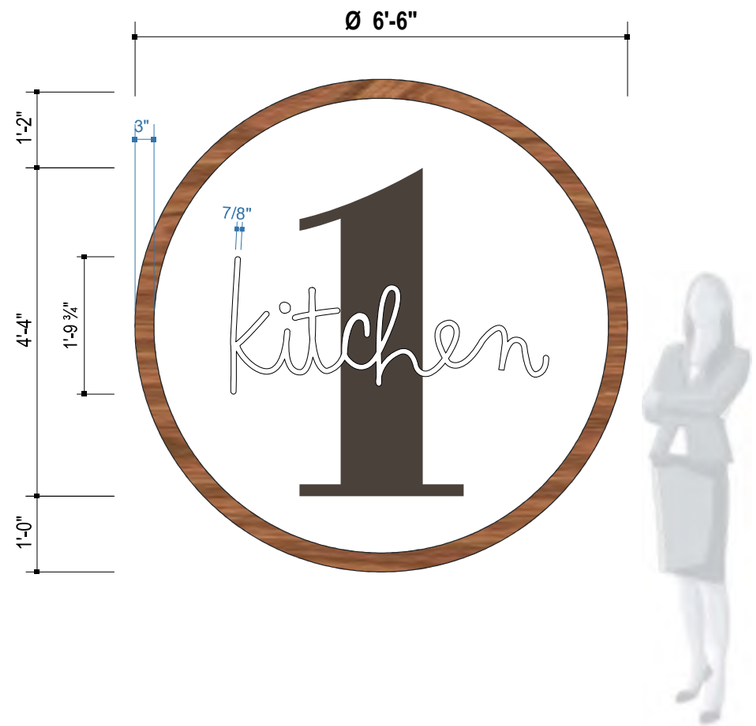

RING

Fabricated with aluminum covered
with wood veneer (color and texture TBD)
on first surface (to match building).
White L.E.D.s hidden inside, lighting towards center.
Translucent white #7328 polycarbonate 1/8" thick
inside the ring according to the circle shape.
Installed on canopy.

1

Aluminum channel number painted dark gray
to match steel beam. Opaque.
Installed on canopy.

KITCHEN

3/8" thick cut-out aluminum painted white.
Mounted to number and canopy,
Spaced with non corrosive threaded rods
painted to match canopy color.

CUSTOM

Area / Sup.	42,25 sq. ft.
Weight / Poids	
Illumination	LED
Voltage	120V
LED Temp.	3000K

CERTIFICATIONS UL CSA REQUIRED

Couleurs / Colours

Colours may not be exactly as shown on screen. Please refer to appropriate charts for exact colours.

Les couleurs illustrées à l'écran peuvent ne pas être exactes. Veuillez vous référer aux chartes appropriées pour les couleurs exactes

Simulation

Detail

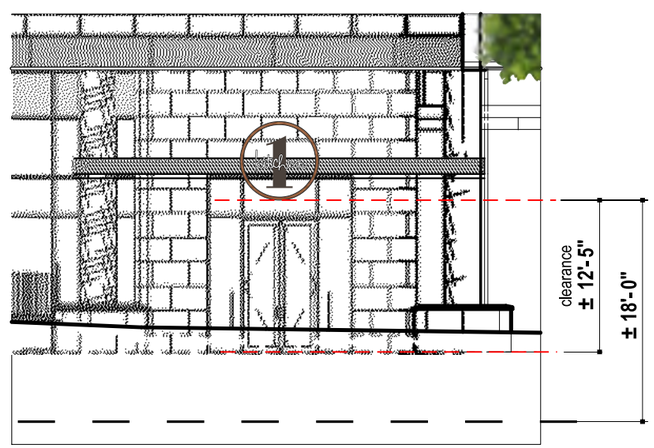

Detail

Relief

Remarques / Notes

3000 k gives a warmer and yellower light, so could change the colors

Survey is required before production

Wood type + colour and colour of beam required before production.

Client Approval / Approbation client

Signature: _____

Date: ____ / ____ / ____ (YEAR / ANNÉE, MONTH / MOIS, DAY / JOUR)

FOR PERMITTING
POUR PERMIS

TRANSWORLD

CONTACT

9310, boul. Parkway, Montréal (Québec) H1J 1N7
T : **514.352.8030**
F : 514.352.0386

info@transworldsigns.com
www.transworldsigns.com

AVIS / NOTICE

Ce dessin, incluant la conception graphique et les détails techniques, est la seule propriété d'Enseignes Transworld cie et ne peut être reproduit, copié ou utilisé pour fabrication sans l'autorisation préalable d'Enseignes Transworld cie.

This drawing, including graphic layout and technical details, is the property of Transworld Signs Co and cannot be reproduced, copied, or used without prior authorization from Transworld Signs Co.

Client	Site
Hilton Embassy	

Adr. / Add.: 710 Demonbreun Street, Nashville, TN

Date	Rep.	Des.
2020-01-06	S. Gabrisch	N. Dion

2019-03062-GDWG-A7-CHN

REVISIONS

01	Kitchen 1	AA	2020-01-18
02	adjusted to tech drawings for permit	ND	2021-06-09
03	modified after meeting for permit	ND	2021-06-10
04	modified with tech doc for permit	ND	2021-07-07
05	adjusted clearance	ND	2021-08-25
06	Modified as requested	ND	2021-09-03

(J) B1 1X SETS OF ILLUMINATED CHANNELS on vertical cabinet (Blade)

INSTALLED IN PROJECTION

SCALE 1/16" = 1'-0"

Area / Sup.	
Weight / Poids	
Illumination	LED
Voltage	
LED Temp.	3000K

CERTIFICATIONS UL SP REQUIRED

Couleurs / Colours

Colours may not be exactly as shown on screen. Please refer to appropriate charts for exact colours.

Les couleurs illustrées à l'écran peuvent ne pas être exactes. Veuillez vous référer aux chartes appropriées pour les couleurs exactes

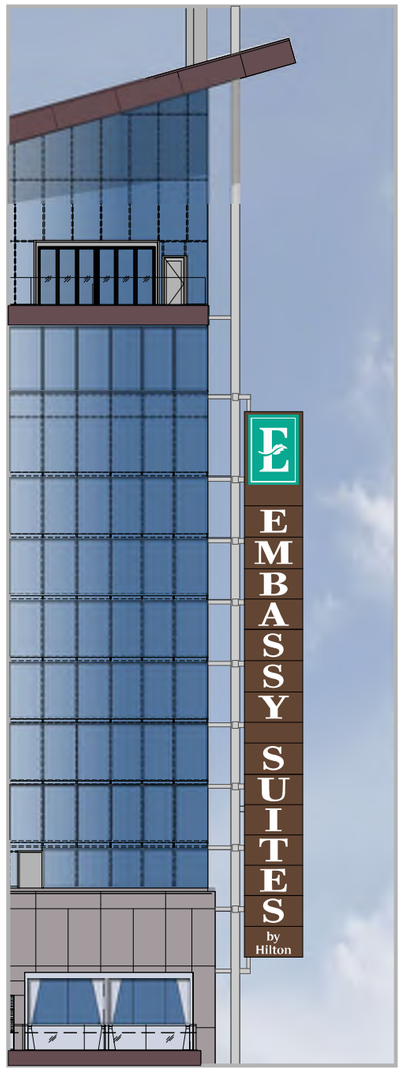

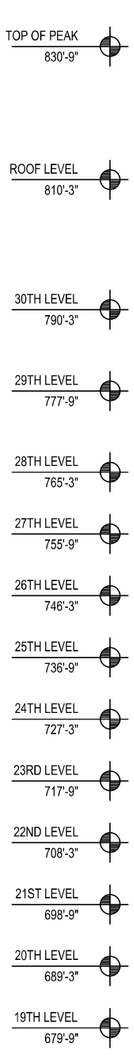

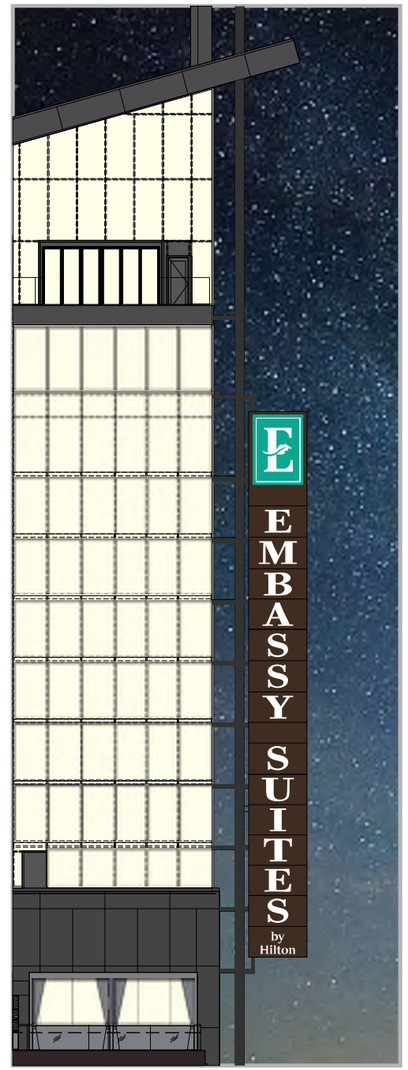

Ouest view

Day

SCALE 1" = 280"

Ouest view

Night

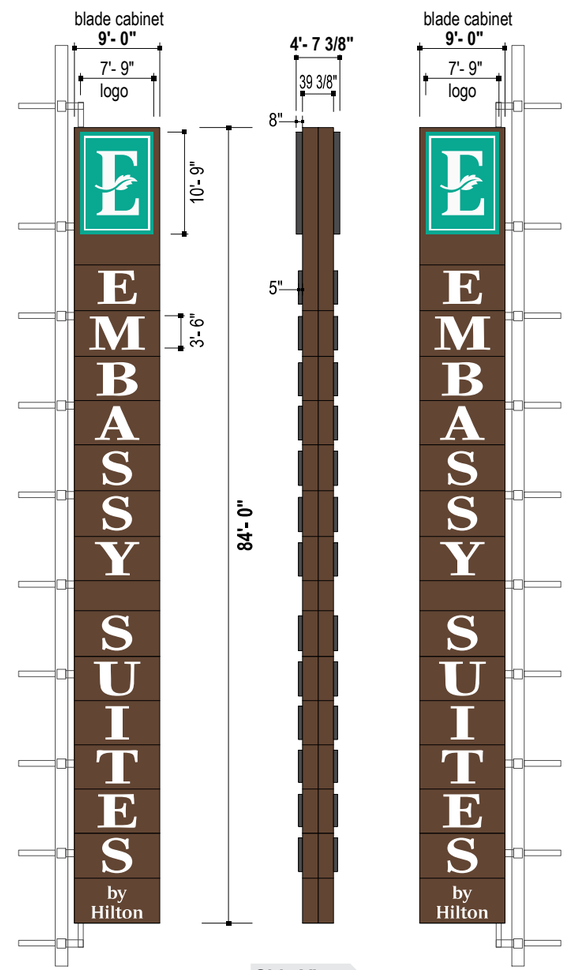

Side View

Graphic Elevation

Facing West

Graphic Elevation

Facing East

DESCRIPTION

Cabinet :
Fabricated with aluminium, painted dark brown.

Logo :
with flex face and vinyl, illuminated by L.E.D.,
Retainer : face turquoise, aluminum sides painted dark grey.

Channel : letters with plastic faces, aluminum sides painted dark grey. Illuminated with L.E.D.

Installation with structure, plates and anchors.
In projection on existing structure.

NOTE :
For details of the installation structure and anchors, see the technical drawings.

Remarques / Notes

3000 k gives a warmer and yellower light, so could change the colors

Survey is required

Client Approval / Approbation client

Signature: _____

Date: ____ / ____ / ____ (YEAR / ANNÉE, MONTH / MOIS, DAY / JOUR)

FOR PERMITTING
POUR PERMIS

TRANSWORLD

CONTACT

9310, boul. Parkway, Montréal (Québec) H1J 1N7
T : **514.352.8030**
F : 514.352.0386

info@transworldsigns.com
www.transworldsigns.com

AVIS / NOTICE

Ce dessin, incluant la conception graphique et les détails techniques, est la seule propriété d'Enseignes Transworld cie et ne peut être reproduit, copié ou utilisé pour fabrication sans l'autorisation préalable d'Enseignes Transworld cie.

This drawing, including graphic layout and technical details, is the property of Transworld Signs Co and cannot be reproduced, copied, or used without prior authorization from Transworld Signs Co.

Licence RBQ : 8270-5815-47 titulaire d'une licence délivrée en vertu de la Loi sur le bâtiment du Québec

Client	Site
Hilton Embassy	

Adr. / Add. 710 Demonbreun Street, Nashville, TN

Date	Rep.	Des.
2020-01-20	S. Gabrisch	N. Dion

2019-03062-GDWG-B-BLADE

REVISIONS

#	Description	Des.	Date
01	added Java color and cool grey 4C	ND	2020-10-26
02	for permit stamp	ND	2020-12-18
03	Java color both sides	ND	2020-12-18
04	for permit stamp	ND	2021-07-08
05	Modified as requested	ND	2021-09-03

(C) South Side C1
1X

HOTEL 1 IDENTIFICATIONS

SCALE 1/8" = 1'-0"

Area / Sup.	#1: 110.85 Sq. Ft. HOTEL: 22.38 Sq. Ft.	
Weight / Poids		
Illumination	LED	CERTIFICATIONS UL CSA REQUIRED
Voltage	120V	
LED Temp.	3000K	

Couleurs / Colours

Colours may not be exactly as shown on screen. Please refer to appropriate charts for exact colours.

Les couleurs illustrées à l'écran peuvent ne pas être exactes. Veuillez vous référer aux chartes appropriées pour les couleurs exactes.

DESCRIPTION

Aluminum fabrication
painted «Black Magic».
Black vinyl applied on first surface.

Illuminated with white L.E.D.
at perimeter of rectangle,
number and letters.

Side View

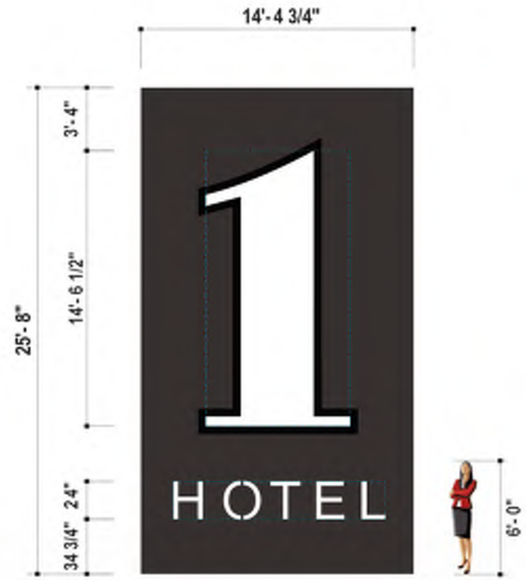

Graphic Elevation

Simulation Day

Simulation Night

Simulation

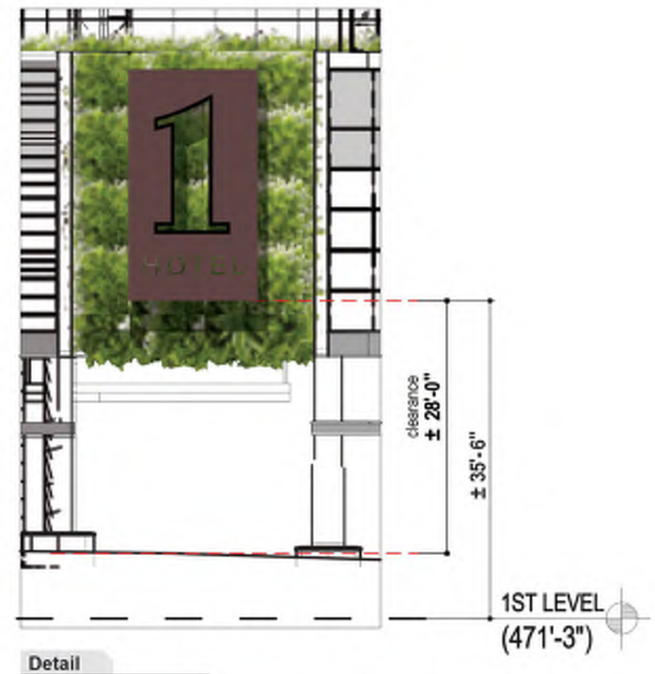

Detail

Remarques / Notes

3000 k gives a warmer and yellower light, so could change the colors

Survey is required before production

Client Approval / Approbation client

Signature: _____

Date: ____ / ____ / ____ (YEAR / ANNEE, MONTH / MOIS, DAY / JOUR)

FOR PERMITTING
POUR PERMIS

TRANSWORLD

CONTACT

9310, boul. Parkway, Montréal (Québec) H1J 1N7
T : 514.352.8030
F : 514.352.0386

info@transworldsigns.com
www.transworldsigns.com

AVIS / NOTICE

Ce dessin, incluant la conception graphique et les détails techniques, est la seule propriété d'Enseignes Transworld cie et ne peut être reproduit, copié ou utilisé pour fabrication sans l'autorisation préalable d'Enseignes Transworld cie.

This drawing, including graphic layout and technical details, is the property of Transworld Signs Co and cannot be reproduced, copied, or used without prior authorization from Transworld Signs Co.

Licence RBQ : 8270-5815-47 titulaire d'une licence délivrée en vertu de la Loi sur le bâtiment du Québec

Client	Site
Hilton Embassy	

Adr. / Add.: 710 Demonbreun Street, Nashville, TN

Date	Rep.	Des.
2020-01-06	S. Gabrisch	N. Dion

2019-03062-GDWG-C1-HOTEL1

REVISIONS

#	Description	Des.	Date
01	adjusted to Black Magic color , added stamp	ND	2020-10-26
02	for permit stamp	ND	2020-12-18
03	modified with doc tech for permit	ND	2021-07-07
04	modified with new dimensions	ND	2021-08-06
05	modified clearance	ND	2021-08-25
06	Adjust Area	DP	2021-10-07

(G) West C2 1X

HOTEL 1 IDENTIFICATIONS

SCALE 1/8" = 1'-0"

Area / Sup.	#1: 53.49 Sq. Ft. HOTEL: 10.77 Sq. Ft.	
Weight / Poids	975 lbs	
Illumination	LED	CERTIFICATIONS UL CSA REQUIRED
Voltage	120V	
LED Temp.	3000K	

DESCRIPTION

Fabricated in aluminum painted «Black Magic».

Illuminated with white L.E.D. at perimeter of rectangle, number and letters.

Couleurs / Colours

Colours may not be exactly as shown on screen. Please refer to appropriate charts for exact colours.

Les couleurs illustrées à l'écran peuvent ne pas être exactes. Veuillez vous référer aux chartes appropriées pour les couleurs exactes.

Side View

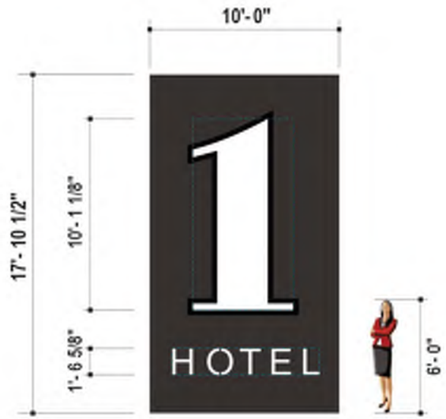

Graphic Elevation

Day

Simulation

Night

Simulation

Simulation

Detail

Remarques / Notes

3000 k gives a warmer and yellower light, so could change the colors

Survey is required before production

Client Approval / Approbation client

Signature: _____

Date: ____ / ____ / ____ (YEAR / ANNÉE, MONTH / MOIS, DAY / JOUR)

FOR PERMITTING
POUR PERMIS

TRANSWORLD

CONTACT

9310, boul. Parkway, Montréal (Québec) H1J 1N7
T : 514.352.8030
F : 514.352.0386

info@transworldsigns.com
www.transworldsigns.com

AVIS / NOTICE

Ce dessin, incluant la conception graphique et les détails techniques, est la seule propriété d'Enseignes Transworld cie et ne peut être reproduit, copié ou utilisé pour fabrication sans l'autorisation préalable d'Enseignes Transworld cie.

This drawing, including graphic layout and technical details, is the property of Transworld Signs Co and cannot be reproduced, copied, or used without prior authorization from Transworld Signs Co.

Licence RBQ : 8270-5815-47 titulaire d'une licence délivrée en vertu de la Loi sur le bâtiment du Québec

Client	Site
Hilton Embassy	

Adr. / Add.: 710 Demonbreun Street, Nashville, TN

Date	Rep.	Des.
2020-01-06	S. Gabrisch	N. Dion

2019-03062-GDWG-C2-HOTEL1

REVISIONS

#	Description	Des.	Date
01	adjusted to Black Magic color , added stamp	ND	2020-10-26
02	for permit stamp	ND	2020-12-18
03	modified with tech doc for permit	ND	2021-06-18
04	modified with doc tech for permit	ND	2021-07-07
05			

(A) South C-3 1X ILLUMINATED CHANNEL LETTER

SCALE 1/4" = 1'-0"

Area / Sup.	46.25 sq. ft.
Weight / Poids	
Illumination	LED
Voltage	
LED Temp.	3000K

CERTIFICATIONS REQUIRED

NOTE : For details see technical drawings

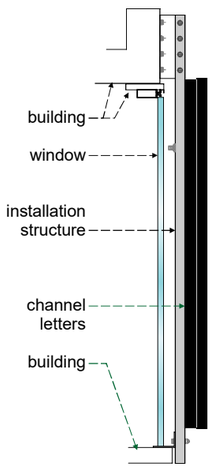

Side View

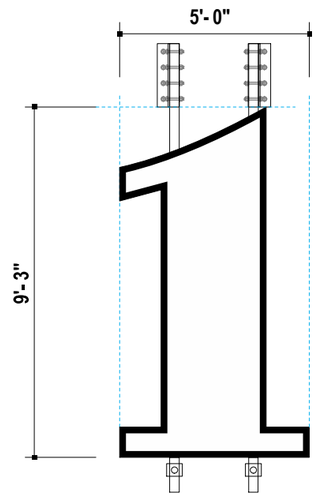

Graphic Elevation

NOTE : For details see technical drawings

DESCRIPTION

Cabinet : Aluminum fabrication painted dark grey.

Flex face.

Illuminated with L.E.D.

Mounted on structure painted to match mullion color (TBD)

280"

Graphic Elevation

Couleurs / Colours

Colours may not be exactly as shown on screen. Please refer to appropriate charts for exact colours.

Les couleurs illustrées à l'écran peuvent ne pas être exactes. Veuillez vous référer aux chartes appropriées pour les couleurs exactes

Remarques / Notes

3000 k gives a warmer and yellower light, so could change the colors

Survey is required before production

Client Approval / Approbation client

Signature: _____

Date: ____ / ____ / ____ (YEAR / ANNÉE, MONTH / MOIS, DAY / JOUR)

FOR PERMITTING
POUR PERMIS

TRANSWORLD

CONTACT

9310, boul. Parkway, Montréal (Québec) H1J 1N7
T : **514.352.8030**
F : 514.352.0386

info@transworldsigns.com
www.transworldsigns.com

AVIS / NOTICE

Ce dessin, incluant la conception graphique et les détails techniques, est la seule propriété d'Enseignes Transworld cie et ne peut être reproduit, copié ou utilisé pour fabrication sans l'autorisation préalable d'Enseignes Transworld cie.

This drawing, including graphic layout and technical details, is the property of Transworld Signs Co and cannot be reproduced, copied, or used without prior authorization from Transworld Signs Co.

Licence RBQ : 8270-5815-47 titulaire d'une licence délivrée en vertu de la Loi sur le bâtiment du Québec

Client	Site
Hilton Embassy	

Adr. / Add.: 710 Demonbreun Street, Nashville, TN

Date	Rep.	Des.
2020-10-26	S. Gabrisch	N. Dion

2019-03062-GDWG-C3-NO1

REVISIONS

#	Description	Des.	Date
01	for permit stamp	ND	2020-12-18
02	for permit stamp based on tech	ND	2020-07-07
03	Modified as requested	ND	2021-09-03
04			
05			

(K) East C4 1X ILLUMINATED D/FACE PROJECTION SIGN

CUSTOM	SCALE 1/4" = 1'-0"
Area / Sup.	24.5 sq. ft.
Weight / Poids	
Illumination	LED
Voltage	120V
LED Temp.	3000K

CERTIFICATIONS UL SIP REQUIRED

Couleurs / Colours

Colours may not be exactly as shown on screen. Please refer to appropriate charts for exact colours.

Les couleurs illustrées à l'écran peuvent ne pas être exactes. Veuillez vous référer aux chartes appropriées pour les couleurs exactes

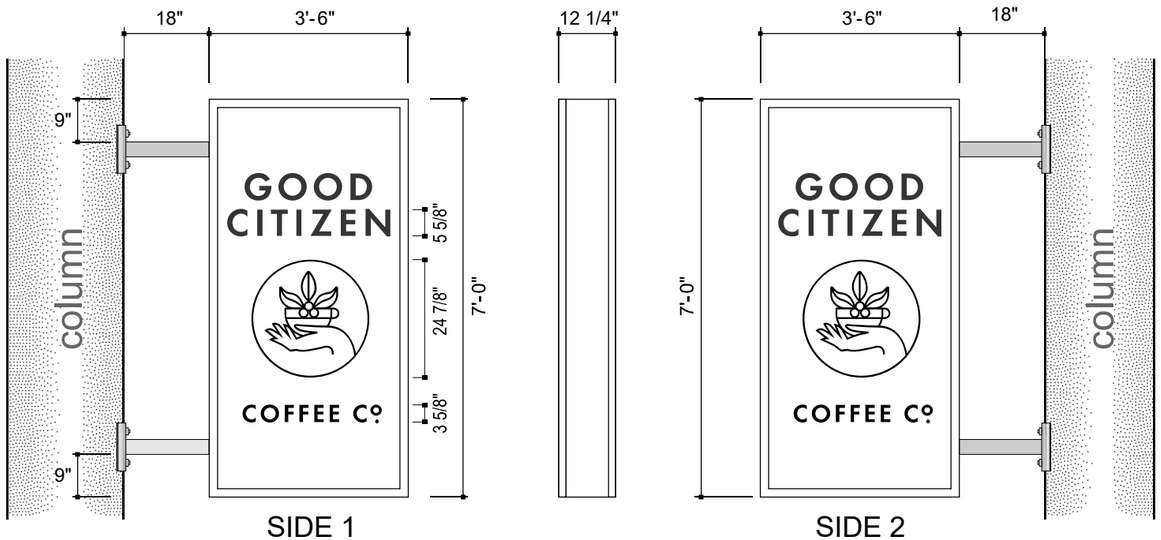

Graphic Elevation

Side View

Graphic Elevation

DESCRIPTION

Cabinet : Fabricated in aluminum, painted white satin finish.

Faces :

(2) 3/16" thick white #7328 acrylic faces with black vinyl on first surface.

Illumination : with L.E.D.

Installation : Mounted in projection with tubes, plates and anchors painted aluminum grey.

Simulation

Remarques / Notes

3000 k gives a warmer and yellower light, so could change the colors

Survey is required before production

Client Approval / Approbation client

Signature: _____

Date: ____ / ____ / ____ (YEAR / ANNÉE, MONTH / MOIS, DAY / JOUR)

FOR PERMITTING
POUR PERMIS

TRANSWORLD

CONTACT

9310, boul. Parkway, Montréal (Québec) H1J 1N7
T : **514.352.8030**
F : 514.352.0386

info@transworldsigns.com
www.transworldsigns.com

AVIS / NOTICE

Ce dessin, incluant la conception graphique et les détails techniques, est la seule propriété d'Enseignes Transworld cie et ne peut être reproduit, copié ou utilisé pour fabrication sans l'autorisation préalable d'Enseignes Transworld cie.

This drawing, including graphic layout and technical details, is the property of Transworld Signs Co and cannot be reproduced, copied, or used without prior authorization from Transworld Signs Co.

Licence RBQ : 8270-5815-47 titulaire d'une licence délivrée en vertu de la Loi sur le bâtiment du Québec

Client	Site
Hilton Embassy	

Adr. / Add.
710 Demonbreun Street, Nashville, TN

Date	Rep.	Des.
2020-10-26	S. Gabrisch	N. Dion

2019-03062-GDWG-C4-COFF-PROJ

REVISIONS

#	Description	Des.	Date
01	for permit stamp	ND	2020-12-18
02	changed for STAY GOLDEN logo	ND	2020-12-18
03	for permit stamp based on tech	ND	2020-07-07
04	Changed logo	ND	2020-08-13
05			

ELEVATIONS
North / East

SCALE 1" = 554"

CERTIFICATIONS
UL CSA
REQUIRED

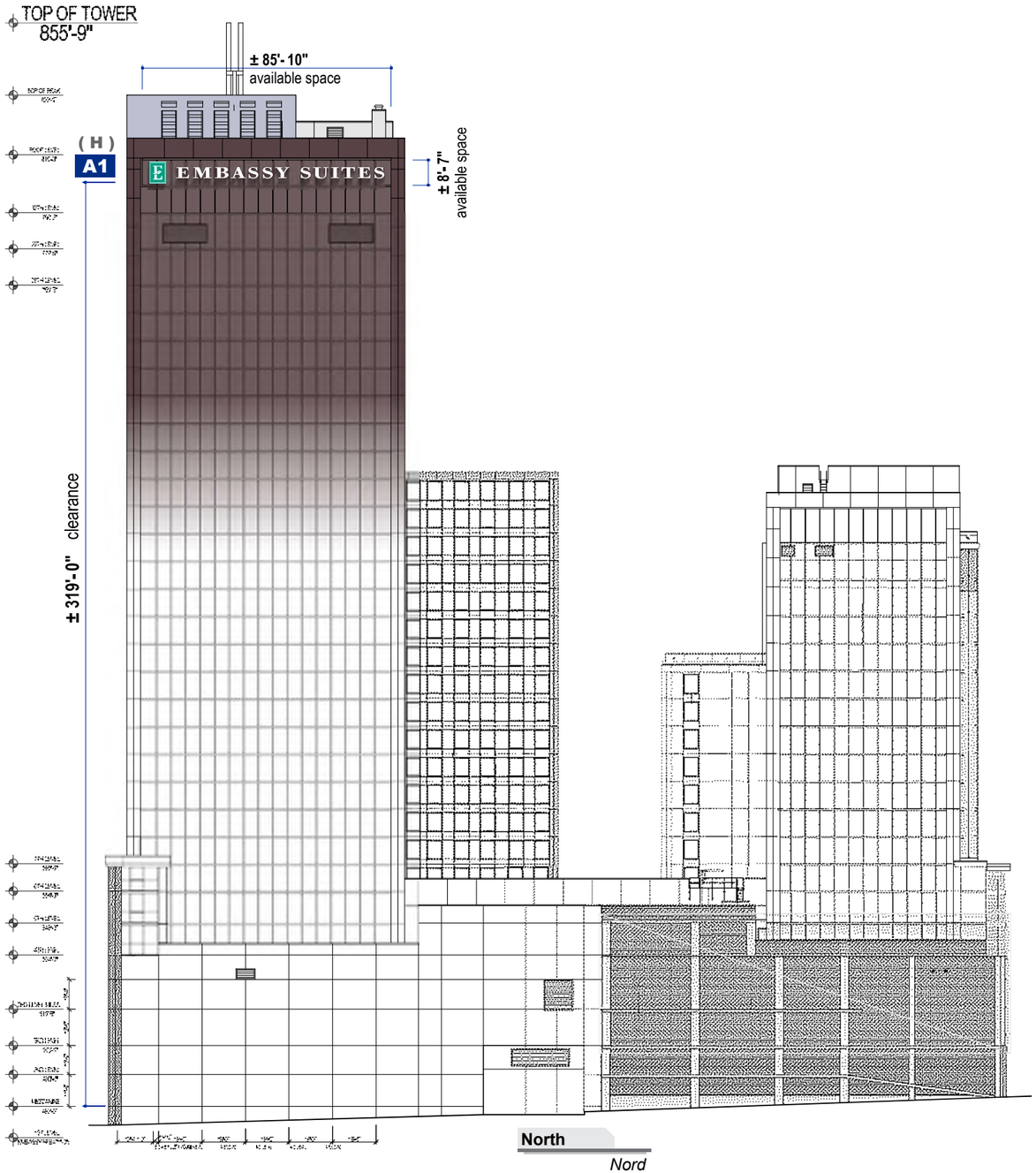

North
Nord

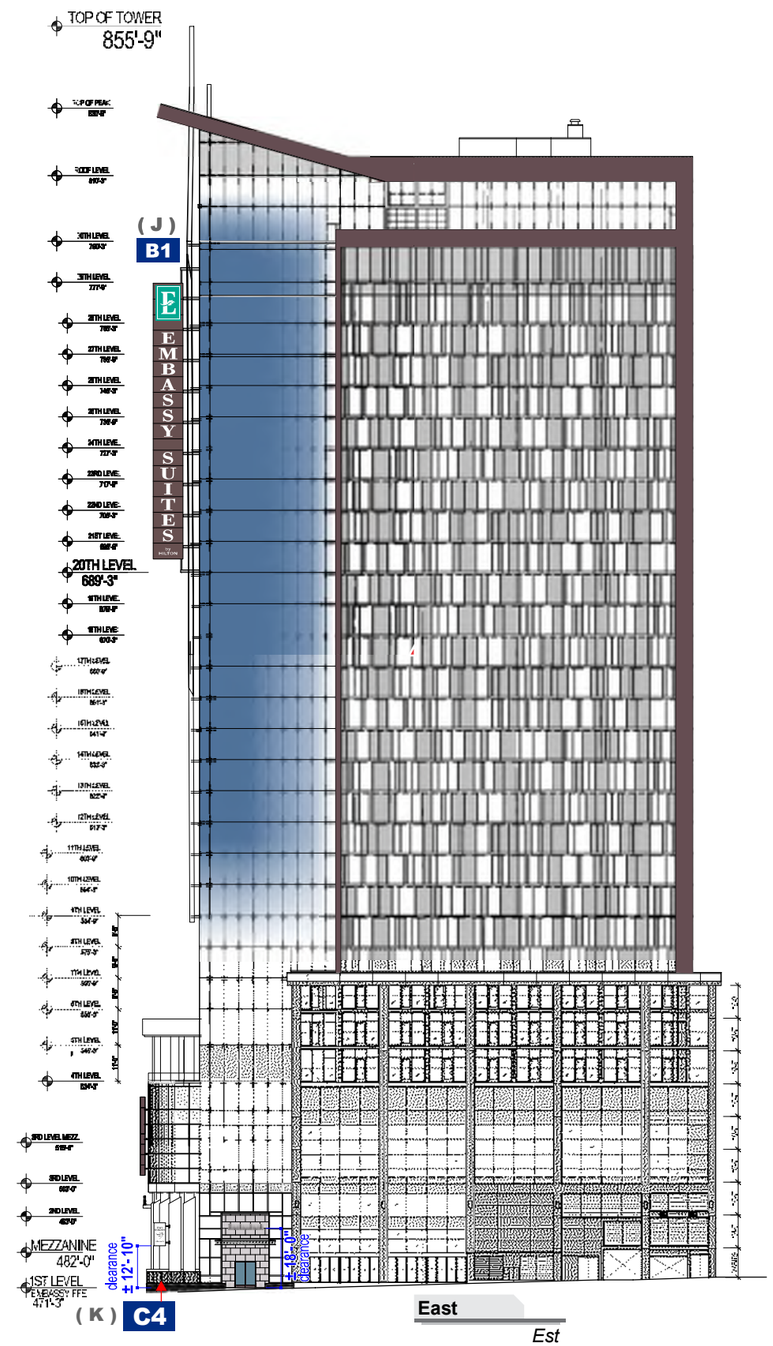

East
Est

Remarques / Notes

Client Approval / Approbation client

Signature:

Date: ____ / ____ / ____
YEAR / ANNÉE MONTH / MOIS DAY / JOUR

FOR PERMITTING
POUR PERMIS

TRANSWORLD

CONTACT

9310, boul. Parkway, Montréal (Québec) H1J 1N7
T : **514.352.8030**
F : 514.352.0386

info@transworldsigns.com
www.transworldsigns.com

AVIS / NOTICE

Ce dessin, incluant la conception graphique et les détails techniques, est la seule propriété d'Enseignes Transworld cie et ne peut être reproduit, copié ou utilisé pour fabrication sans l'autorisation préalable d'Enseignes Transworld cie.

This drawing, including graphic layout and technical details, is the property of Transworld Signs Co and cannot be reproduced, copied, or used without prior authorization from Transworld Signs Co.

Licence RBQ : 8270-5815-47 titulaire d'une licence délivrée en vertu de la Loi sur le bâtiment du Québec

Client	Site
Hilton Embassy	

Adr. / Add. 710 Demonbreun Street, Nashville, TN

Date	Rep.	Des.
2020-01-06	S. Gabrisch	N. Dion

2019-03062-GDWG-ELEV-N-E

REVISIONS

01	Added stamp and C4	ND	2020-10-26
02	Added A6, removed Coffee	ND	2020-12-18
03	Change Coffee for STAY GOLDEN on projection sign	ND	2020-12-18
04	Change blade color for Java both side	ND	2020-12-18
05	Permit stamp	ND	2020-07-07
06	Removed «Restaurant»	ND	2020-08-16

ELEVATIONS
South / West

SCALE 1" = 554"

CERTIFICATIONS

UL CSA

REQUIRED

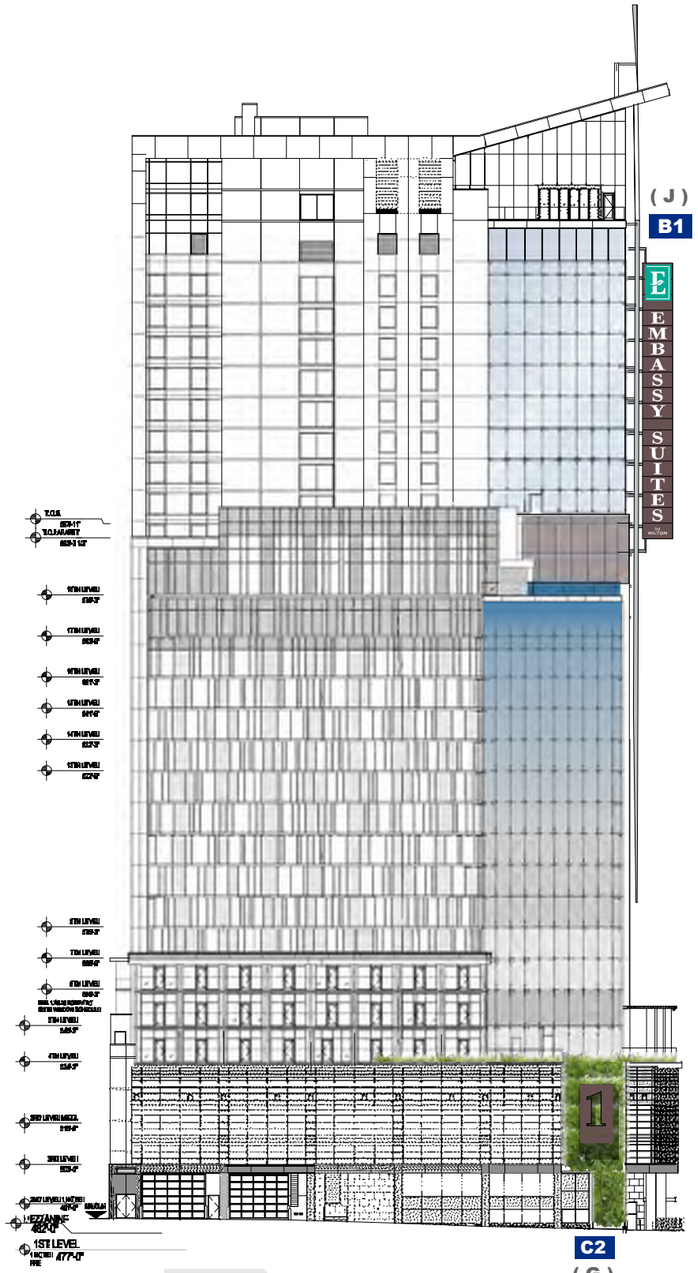

West

Ouest

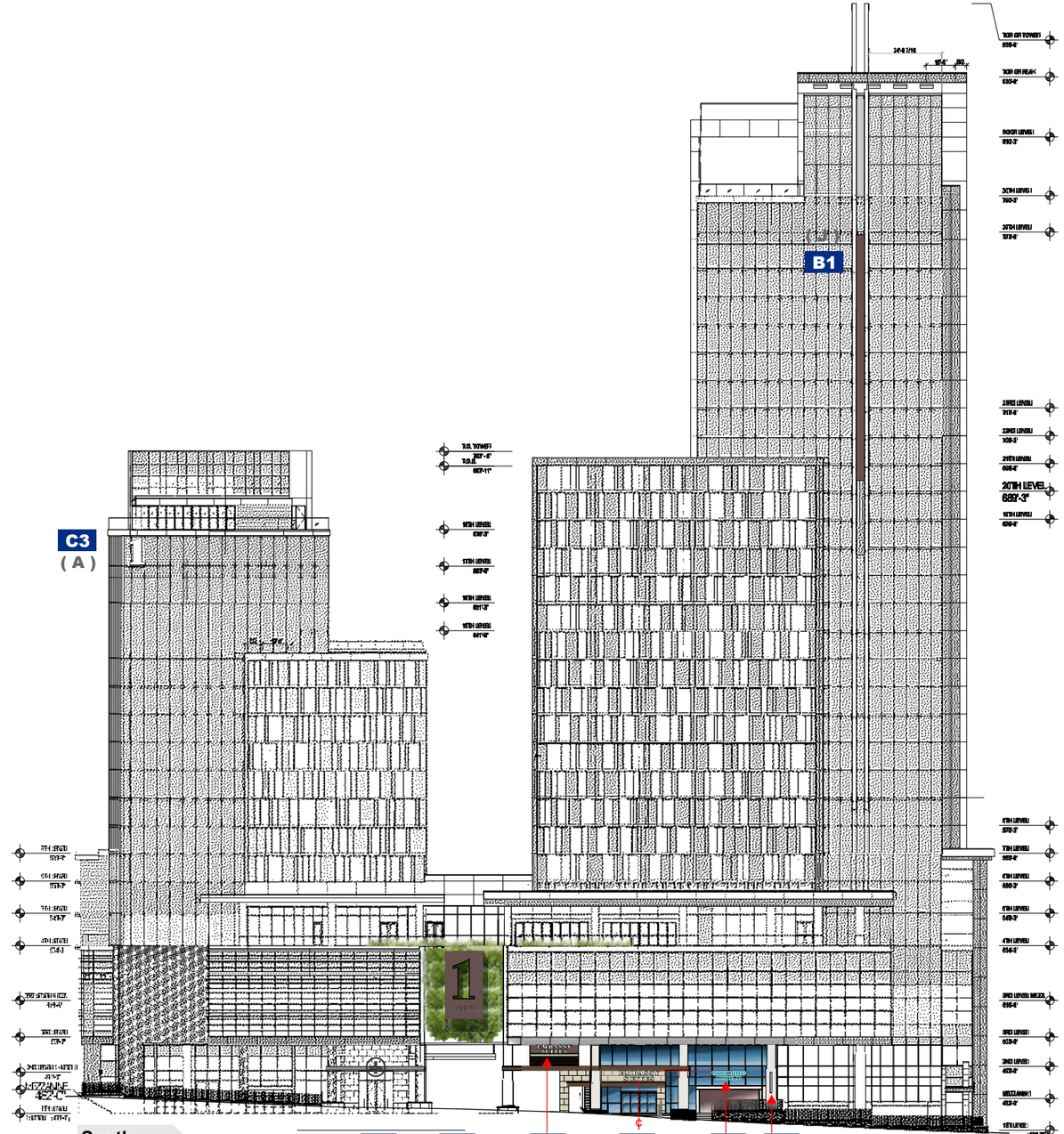

South

Sud

Remarques / Notes

Survey is required before production

Client Approval / Approbation client

Signature:

Date: / / (YEAR / ANNÉE, MONTH / MOIS, DAY / JOUR)

FOR PERMITTING
POUR PERMIS

TRANSWORLD

CONTACT

9310, boul. Parkway, Montréal (Québec) H1J 1N7
T : **514.352.8030**
F : 514.352.0386

info@transworldsigns.com
www.transworldsigns.com

AVIS / NOTICE

Ce dessin, incluant la conception graphique et les détails techniques, est la seule propriété d'Enseignes Transworld cie et ne peut être reproduit, copié ou utilisé pour fabrication sans l'autorisation préalable d'Enseignes Transworld cie.

This drawing, including graphic layout and technical details, is the property of Transworld Signs Co and cannot be reproduced, copied, or used without prior authorization from Transworld Signs Co.

Licence RBQ : 8270-5815-47 titulaire d'une licence délivrée en vertu de la Loi sur le bâtiment du Québec

Site	Hilton Embassy
Adr. / Add.	710 Demonbreun Street, Nashville, TN
Date	2020-01-06
Rep.	S. Gabrisch
Des.	N. Dion
	2019-03062-GDWG-ELEV-S-W

REVISIONS

#	Description	Des.	Date
01	Added A6, removed Coffee	ND	2020-12-18
02	Change blade color for Java both side	ND	2020-12-18
03	Stamp for permit	ND	2020-07-07
04	C1 - modified dim.	ND	2020-08-06
05	changed Coffee signature, Embassy.	ND	2020-08-16

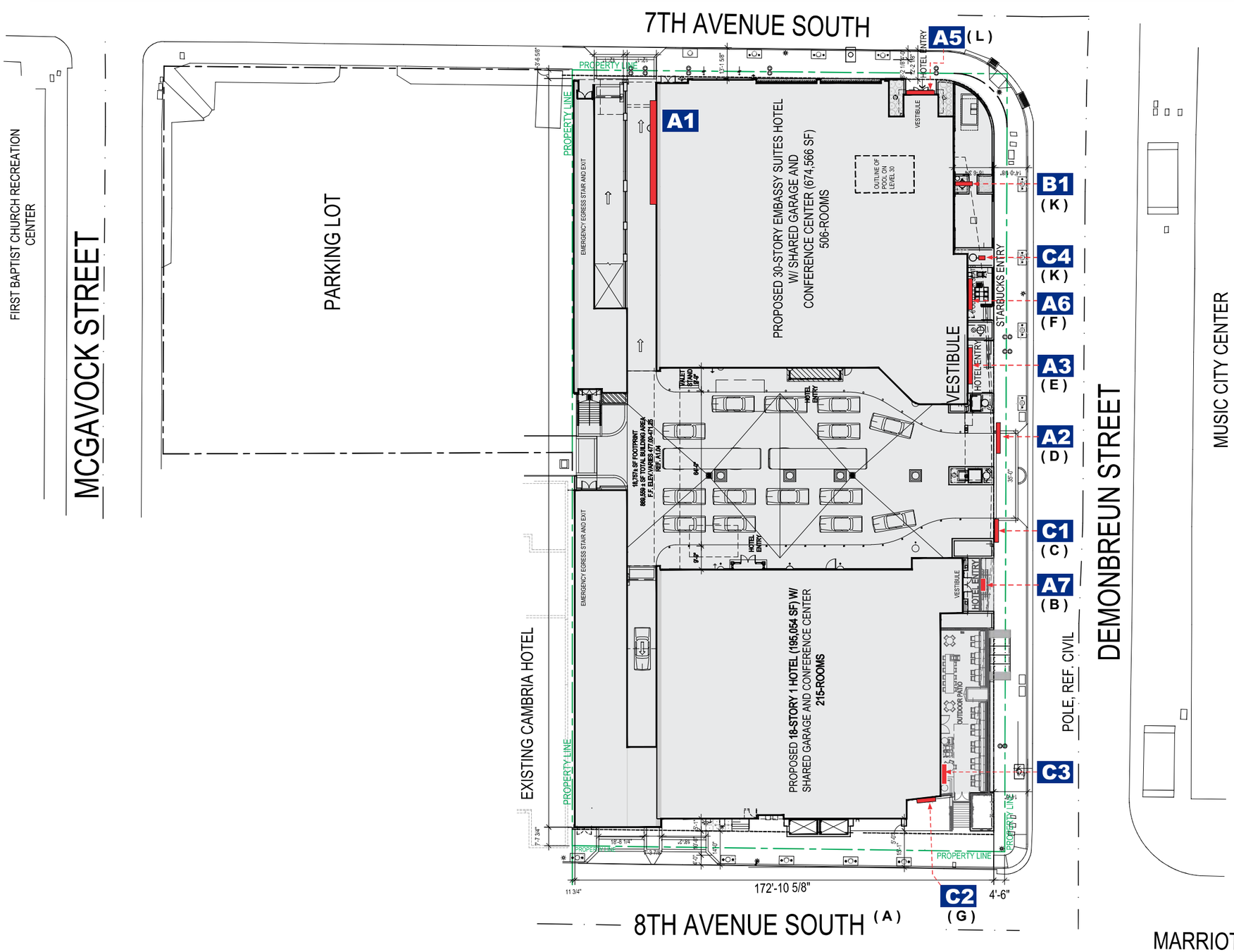

SITE PLAN

Area / Sup.	
Weight / Poids	
Illumination	
Voltage	
LED Temp.	

TRUE NORTH

NORTH

Couleurs / Colours

Colours may not be exactly as shown on screen. Please refer to appropriate charts for exact colours.

Les couleurs illustrées à l'écran peuvent ne pas être exactes. Veuillez vous référer aux chartes appropriées pour les couleurs exactes

Remarques / Notes

Client Approval / Approbation client

Signature: _____

Date: ____ / ____ / ____ (YEAR / ANNÉE — MONTH / MOIS — DAY / JOUR)

FOR PERMITTING
POUR PERMIS

TRANSWORLD

CONTACT

9310, boul. Parkway, Montréal (Québec) H1J 1N7
T : **514.352.8030**
F : 514.352.0386

info@transworldsigns.com
www.transworldsigns.com

AVIS / NOTICE

Ce dessin, incluant la conception graphique et les détails techniques, est la seule propriété d'Enseignes Transworld cie et ne peut être reproduit, copié ou utilisé pour fabrication sans l'autorisation préalable d'Enseignes Transworld cie.

This drawing, including graphic layout and technical details, is the property of Transworld Signs Co and cannot be reproduced, copied, or used without prior authorization from Transworld Signs Co.

Licence RBQ : 8270-5815-47 titulaire d'une licence délivrée en vertu de la Loi sur le bâtiment du Québec

Client	Site
Hilton Embassy	

Adr. / Add.: 710 Demonbreun Street, Nashville, TN

Date	Rep.	Des.
2021-07-07	S. Gabrisch	N. Dion

2019-03062-GDWG-PLAN

REVISIONS

#	Description	Des.	Date
01	Adjusted C3	ND	2021-08-16
02			
03			
04			
05			

South Side

ELEVATION DETAIL

SALE / ÉCHELLE 3/8" = 1'-0"

Couleurs / Colours

Colours may not be exactly as shown on screen. Please refer to appropriate charts for exact colours.

Les couleurs illustrées à l'écran peuvent ne pas être exactes. Veuillez vous référer aux chartes appropriées pour les couleurs exactes

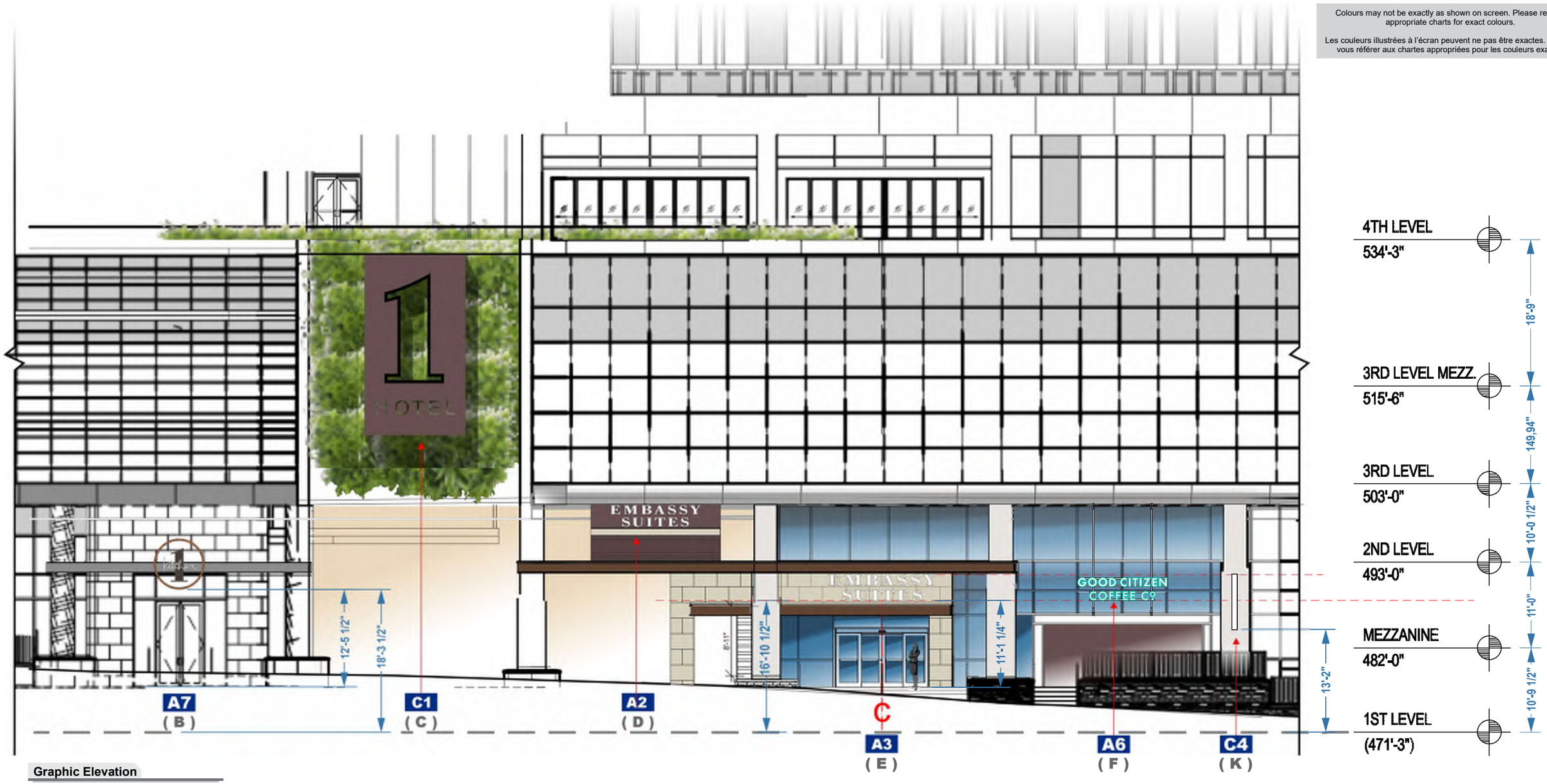

Graphic Elevation

TRANSWORLD

CONTACT

9310, boul. Parkway, Montréal (Québec) H1J 1N7
T : **514.352.8030**
F : 514.352.0386

info@transworldsigns.com
www.transworldsigns.com

AVIS / NOTICE

Ce dessin, incluant la conception graphique et les détails techniques, est la seule propriété d'Enseignes Transworld cie et ne peut être reproduit, copié ou utilisé pour fabrication sans l'autorisation préalable d'Enseignes Transworld cie.

This drawing, including graphic layout and technical details, is the property of Transworld Signs Co and cannot be reproduced, copied, or used without prior authorization from Transworld Signs Co.

Licence RBQ : 8270-5815-47 titulaire d'une licence délivrée en vertu de la Loi sur le bâtiment du Québec

Client	Site
Hilton Embassy	

Adr. / Add.
710 Demonbreun Street, Nashville, TN

Date	Rep.	Des.
2021-08-25	S. Gabrisch	N. Dion

2019-03062-GDWG-SOUTH-DETAILS

REVISIONS

#	Description	Des.	Date
01			
02			
03			
04			
05			

GENERAL NOTES:

1. Do Not Guess. Direct all Questions Concerning This Drawing to Elrod Engineering, LLC.(615–890–9405)
2. Do Not Scale This Drawing.
3. Graphics are not to be Reproduced From This Drawing.
4. Structural Steel Plate & Angle Shall Conform to ASTM A36 (Fy (Yield)= 36 ksi).
5. Structural Steel Tubing Shall Conform to ASTM A500 Grade "B" (Fy = 46 ksi).
6. Aluminum Structural Shapes Shall Conform to the Specifications from The Aluminum Association's Aluminum Design Manual 2020 for 6061–T6;
   - Square/Rectangular Tube & Round Pipe (Fy: 35ksi Unwelded)
   - Plate and Angle (Fy: 35ksi Unwelded)
   - All Structural Shapes (Welded Fy: 15ksi ≤ 0.375" Thick, 11ksi > 0.375" Thick)
7. For welding aluminum, Use 5356 alloy electrodes for 6061 Base Metal.
8. Steel Welding to Conform to Recommendations as Published by The American Welding Society D1.1.
9. Aluminum Welding to Conform to Recommendations as Published by The American Welding Society D1.2.
10. Workmen Who will Perform Welding Operations Shall be Certified for the Applicable Welding Procedure.
11. For welding steel, Use E70 Series Low Hydrogen Electrodes.
12. Fabricated Steel Shall be Cleaned of Mill Scale, Oil, & Other Surface Contaminates Prior to Painting.
13. Alteration to any Fabricated Part of the Structure by Use of a Cutting Torch or any Other Means is Prohibited Without the Consent of the Engineer.
14. Unless Noted Otherwise, Mounting Bolts to be ASTM F3125 Gr A325. Bolts, Nuts, Flat & Lock Washers to be Zinc Plated or Hot–Dip Galvanized with Threads Excluded From the Shear Plane. Vendor Shall use a Method For Tightening Bolts Such That Proper Pre–load is Obtained as Specified by The American Institute of Steel Construction & The Industrial Fasteners Institute.

ROBERTS ALLEY, JR.
REGISTERED ENGINEER
No. 00102092
STATE OF TENNESSEE

9/10/2021

Drawn	BLR
Checked	ERA
EAC Job#	100z4517
Filename	100x4517dwg
Created	08/26/2021

ELROD ENGINEERING
871 Seven Oaks Blvd., Suite 220
Smyrna, TN 37167
800-553-5111

CLIENT:
Boom Sign & Lighting Co.
184 Sharp Springs Rd
Smryna, TN

GENERAL NOTES

Embassy Suites
710 Demonbreun St
Nashville, TN

Revisions

Sheet No.
S-1

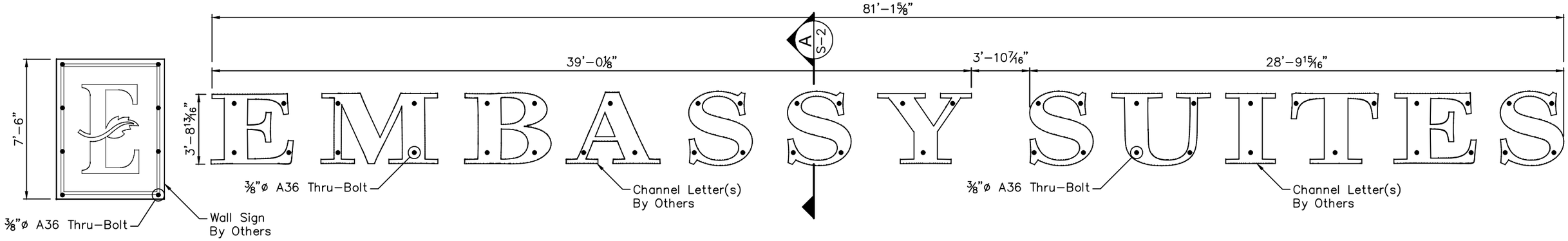

Channel Letter Elevation

SCALE: ¼" = 1'-0"

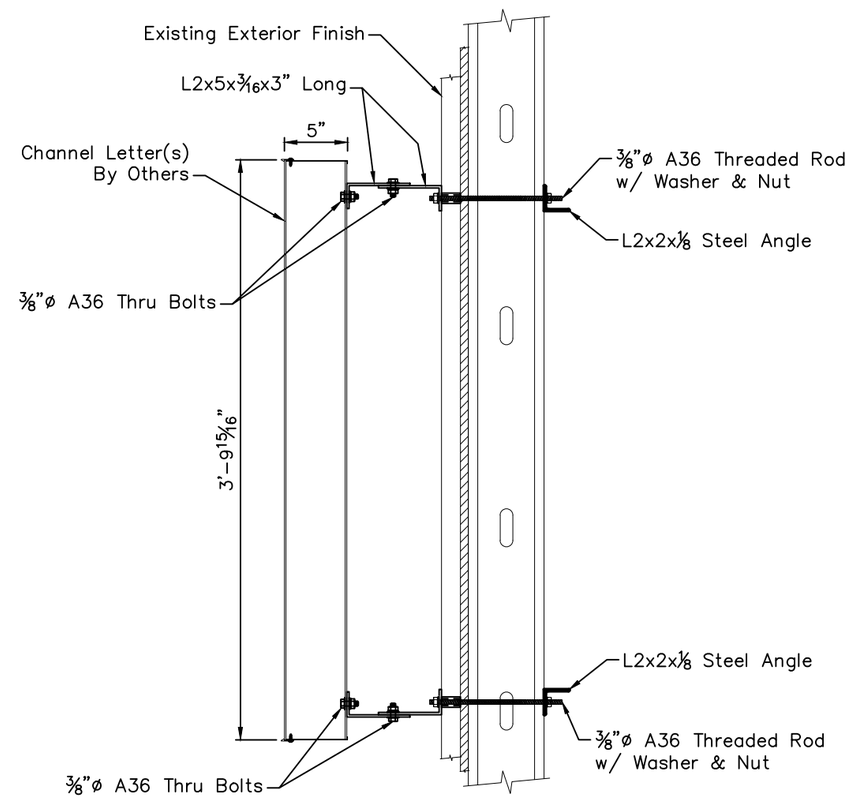

SECTION A

SCALE: 1" = 1'-0"

DESIGN CRITERIA

Building Code: IBC 2018/ASCE 7-16
Analysis: LRFD-AISC 14th
Chapter 16; Section 1609.3.1
Ultimate Wind Speed V_{ult} = 115 mph
Nominal Wind Speed V_{asd} = 87 mph
Risk Category: II $V_{asd} = V_{ult}\sqrt{0.6}$
Exposure: C

ROBERTS ALLEY, JR. LICENSED PROFESSIONAL ENGINEER AGRICULTURE No. 00102092 STATE OF TENNESSEE

9/10/2021

Drawn	BLR
Checked	ERA
EAC Job#	100z4517
Filename	100x4517dwg
Created	08/26/2021

ELROD ENGINEERING
871 Seven Oaks Blvd., Suite 220
Smyrna, TN 37167
800-553-5111

CLIENT:
Boom Sign & Lighting Co.
184 Sharp Springs Rd
Smryna, TN

Sign A1: Channel Letters

Embassy Suites
710 Demonbreun St
Nashville, TN

Revisions

Sheet No.
S-2

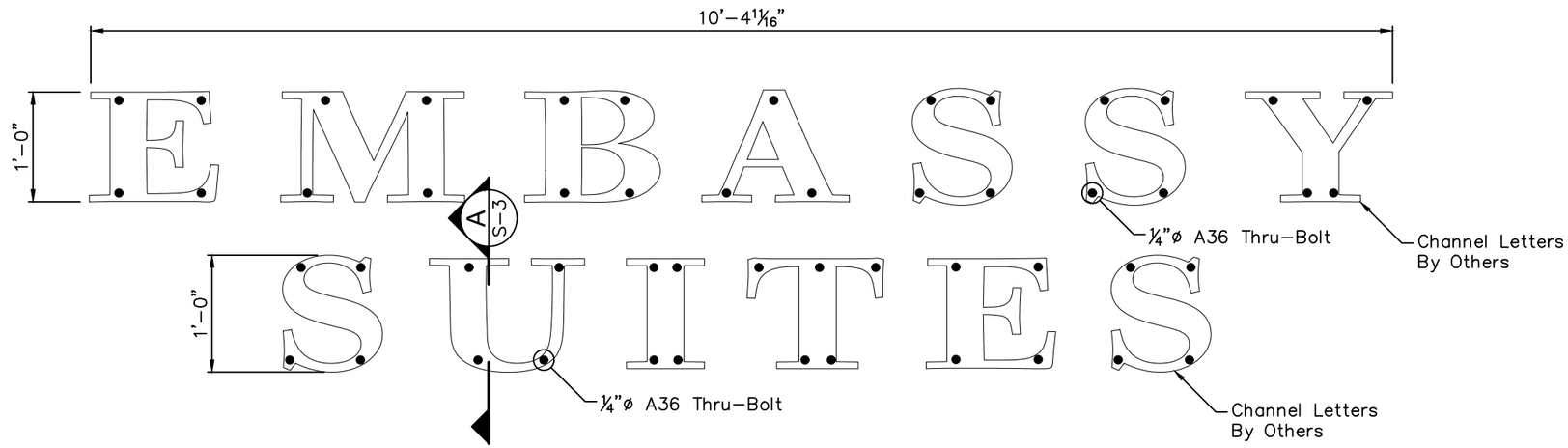

Channel Letter Elevation

SCALE: 3/4" = 1'–0"

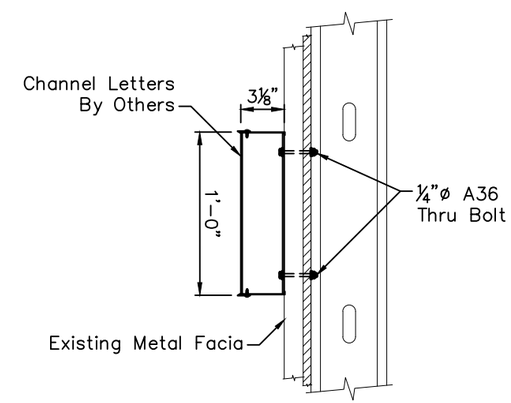

SECTION A

SCALE: 1" = 1'–0"

DESIGN CRITERIA

Building Code: IBC 2018/ASCE 7–16
Analysis: LRFD–AISC 14th
Chapter 16; Section 1609.3.1
Ultimate Wind Speed V_{ult} = 115 mph
Nominal Wind Speed V_{asd} = 87 mph
Risk Category: II $V_{asd} = V_{ult}\sqrt{0.6}$
Exposure: C

ROBERTS ALLEY, JR. REGISTERED ENGINEER AGRICULTURE No. 00102092 STATE OF TENNESSEE

9/10/2021

Drawn	BLR
Checked	ERA
EAC Job#	100z4517
Filename	100x4517dwg
Created	08/26/2021

ELROD ENGINEERING
871 Seven Oaks Blvd., Suite 220
Smyrna, TN 37167
800-553-5111

CLIENT:
Boom Sign & Lighting Co.
184 Sharp Springs Rd
Smryna, TN

Sign A2: Channel Letters

Embassy Suites
710 Demonbreun St
Nashville, TN

Revisions

Sheet No.
S-3

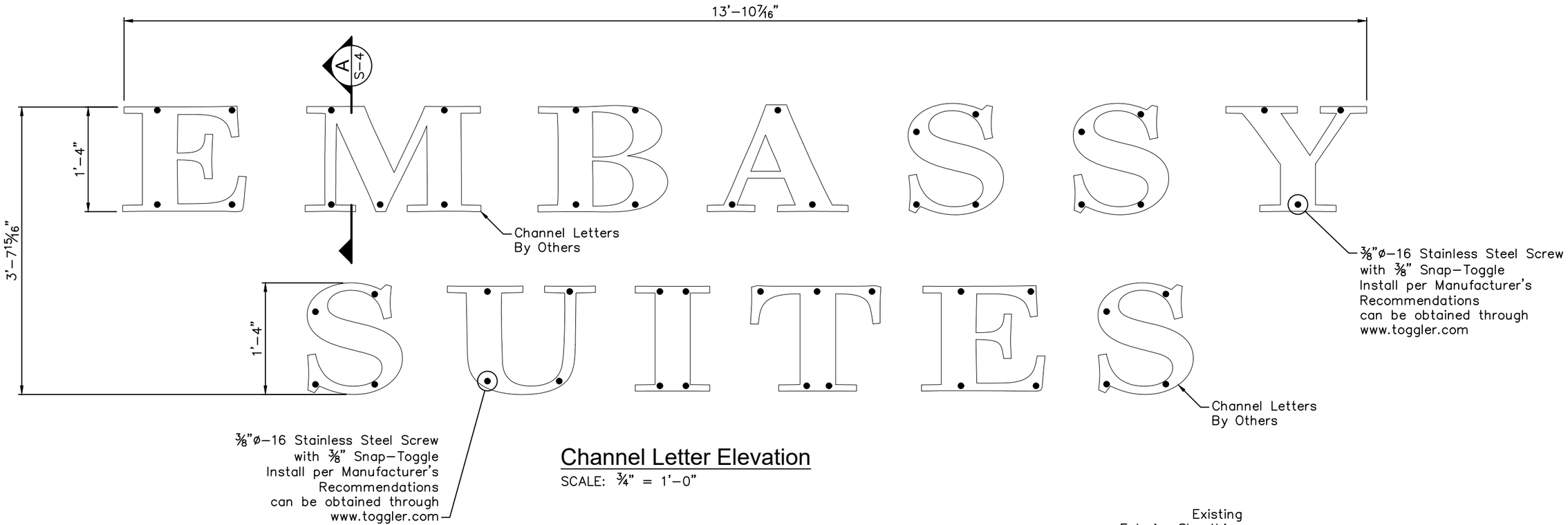

Channel Letter Elevation

SCALE: 3/4" = 1'–0"

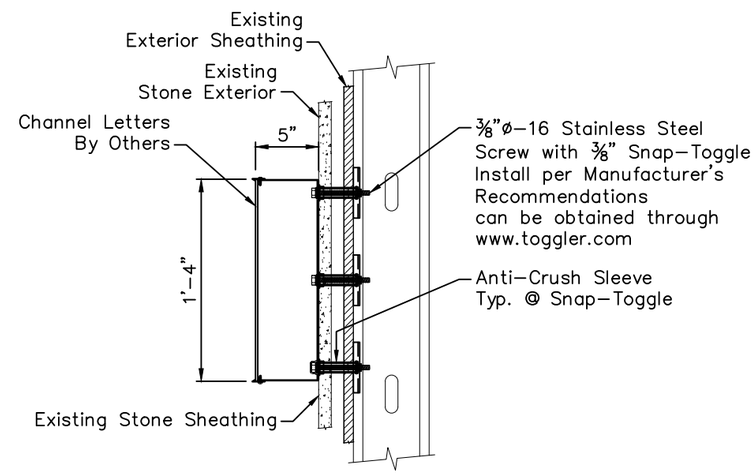

SECTION A

SCALE: 1" = 1'–0"

DESIGN CRITERIA

Building Code: IBC 2018/ASCE 7–16
Analysis: LRFD–AISC 14th
Chapter 16; Section 1609.3.1
Ultimate Wind Speed V_{ult} = 115 mph
Nominal Wind Speed V_{asd} = 87 mph
Risk Category: II $V_{asd} = V_{ult}\sqrt{0.6}$
Exposure: C

ROBERTS ALLEY JR. REGISTERED ENGINEER AGRICULTURE COMMERCE No. 00102092 STATE OF TENNESSEE

9/10/2021

Drawn	BLR
Checked	ERA
EAC Job#	100z4517
Filename	100x4517dwg
Created	08/26/2021

ELROD ENGINEERING
871 Seven Oaks Blvd., Suite 220
Smyrna, TN 37167
800-553-5111

CLIENT:
Boom Sign & Lighting Co.
184 Sharp Springs Rd
Smryna, TN

Sign A3: Channel Letters

Embassy Suites
710 Demonbreun St
Nashville, TN

Revisions

Sheet No.
S-4

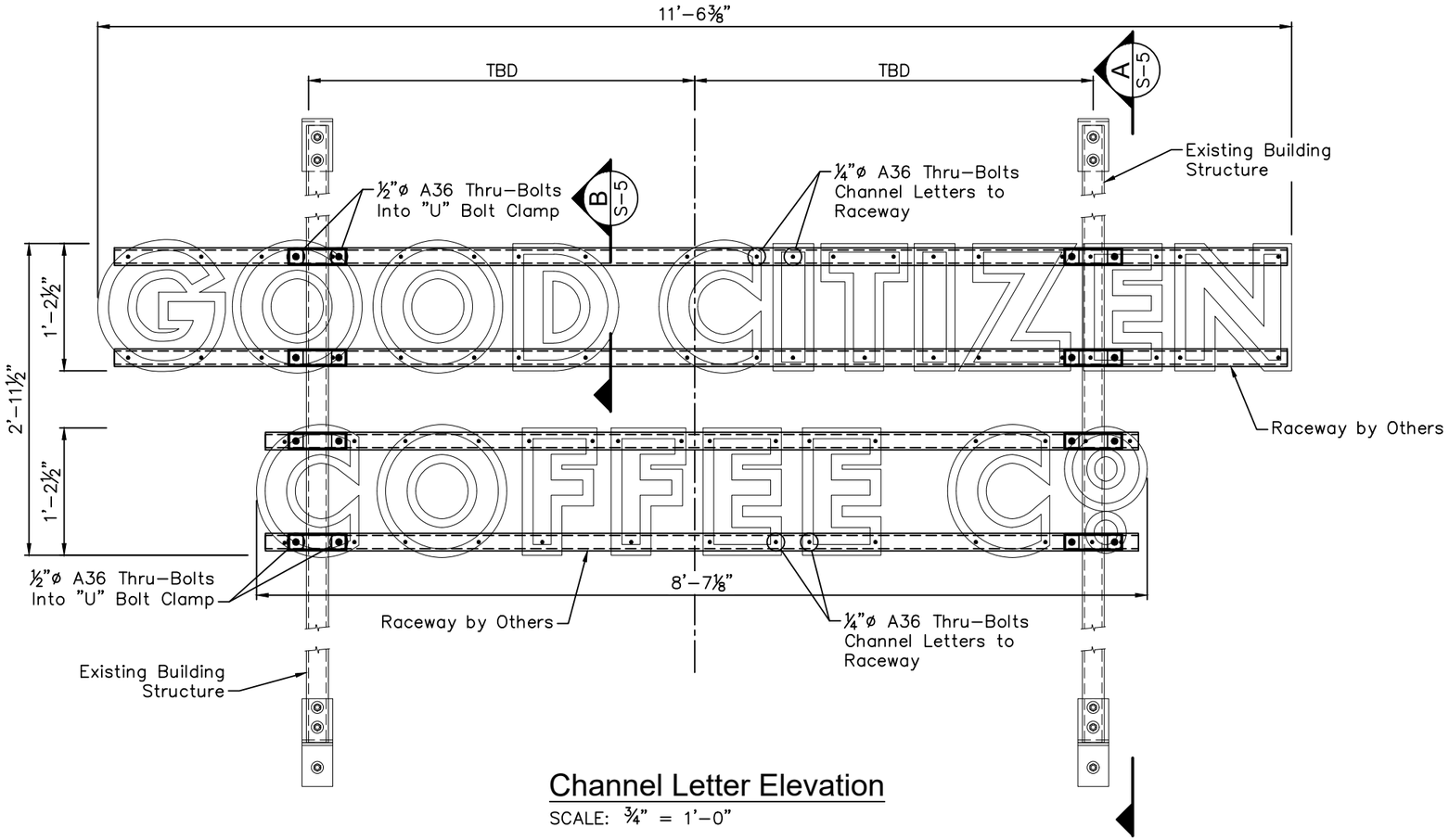

Channel Letter Elevation

SCALE: ¾" = 1'-0"

STEEL & ALUMINUM MEMBERS ARE TO BE PROPERLY COATED TO PREVENT GALVANIC CORROSION BETWEEN THE CONTACT OF DISSIMILAR METALS.

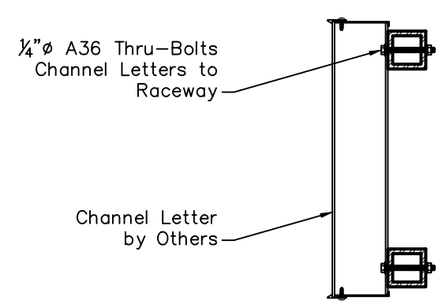

SECTION B

SCALE: ½" = 1'-0"

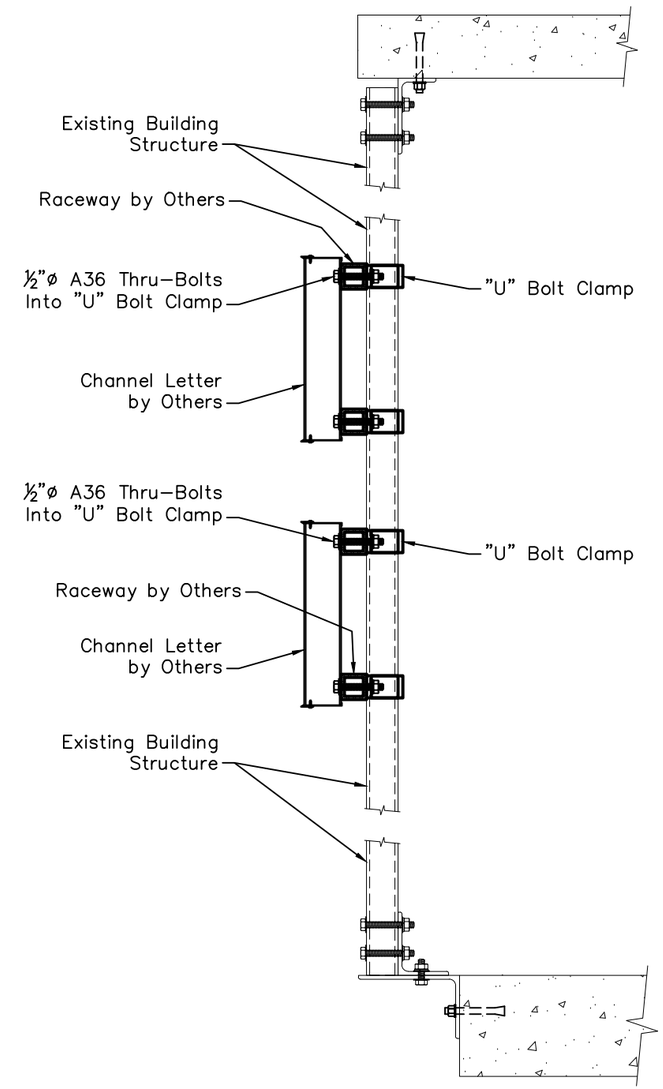

SECTION A

SCALE: 1" = 1'-0"

DESIGN CRITERIA

Building Code: IBC 2018/ASCE 7-16
Analysis: LRFD-AISC 14th
Chapter 16; Section 1609.3.1
Ultimate Wind Speed V_{ult} = 115 mph
Nominal Wind Speed V_{asd} = 87 mph
Risk Category: II $V_{asd} = V_{ult}\sqrt{0.6}$
Exposure: C

ROBERTS ALLEY, JR. REGISTERED ENGINEER AGRICULTURE COMMERCE No. 00102092 STATE OF TENNESSEE

9/10/2021

Drawn	BLR
Checked	ERA
EAC Job#	100z4517
Filename	100x4517dwg
Created	08/26/2021

ELROD ENGINEERING
871 Seven Oaks Blvd., Suite 220
Smyrna, TN 37167
800-553-5111

CLIENT:
Boom Sign & Lighting Co.
184 Sharp Springs Rd
Smryna, TN

Sign A6: Channel Letters

Embassy Suites
710 Demonbreun St
Nashville, TN

Revisions

Sheet No.
S-5

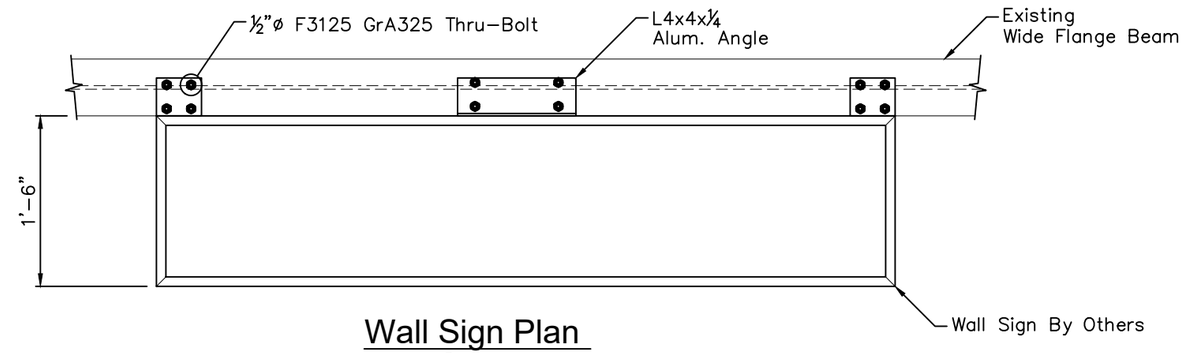

Wall Sign Plan

SCALE: ¾" = 1'-0"

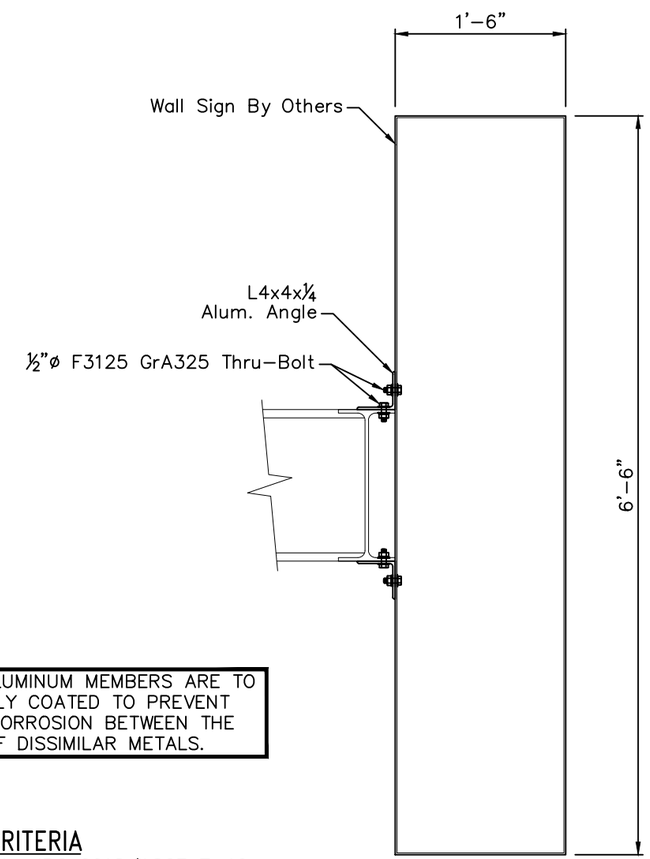

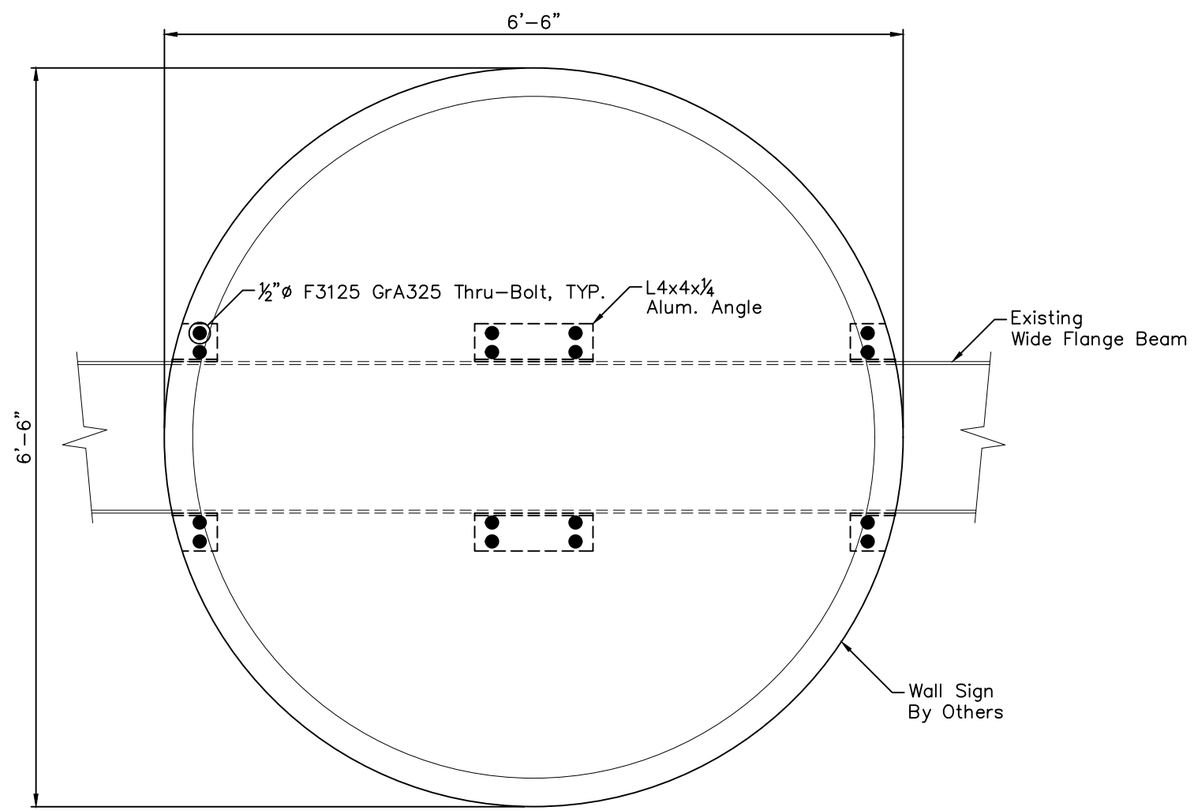

STEEL & ALUMINUM MEMBERS ARE TO BE PROPERLY COATED TO PREVENT GALVANIC CORROSION BETWEEN THE CONTACT OF DISSIMILAR METALS.

DESIGN CRITERIA

Building Code: IBC 2018/ASCE 7-16
Analysis: LRFD-AISC 14th
Chapter 16; Section 1609.3.1
Ultimate Wind Speed V_{ult} = 115 mph
Nominal Wind Speed V_{asd} = 87 mph
Risk Category: II $V_{asd} = V_{ult}\sqrt{0.6}$
Exposure: C

Wall Sign Profile

SCALE: ¾" = 1'-0"

Wall Sign Elevation

SCALE: ¾" = 1'-0"

ROBERTS ALLEY, JR. REGISTERED ENGINEER AGRICULTURE NO. 00102092 STATE OF TENNESSEE

9/10/2021

Drawn	BLR
Checked	ERA
EAC Job#	100z4517
Filename	100x4517dwg
Created	08/26/2021

ELROD ENGINEERING
871 Seven Oaks Blvd., Suite 220
Smyrna, TN 37167
800-553-5111

CLIENT:
Boom Sign & Lighting Co.
184 Sharp Springs Rd
Smryna, TN

Sign A7: Wall Sign

Embassy Suites
710 Demonbreun St
Nashville, TN

Revisions

Sheet No.
S-6

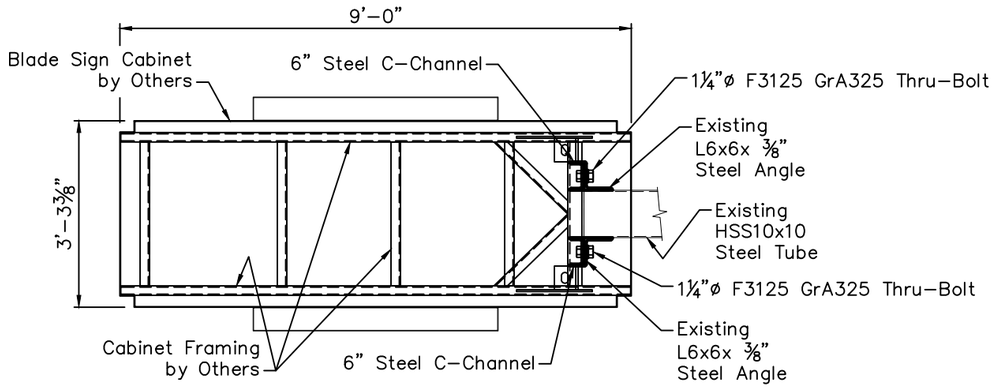

SECTION A

SCALE: ⅜" = 1'–0"

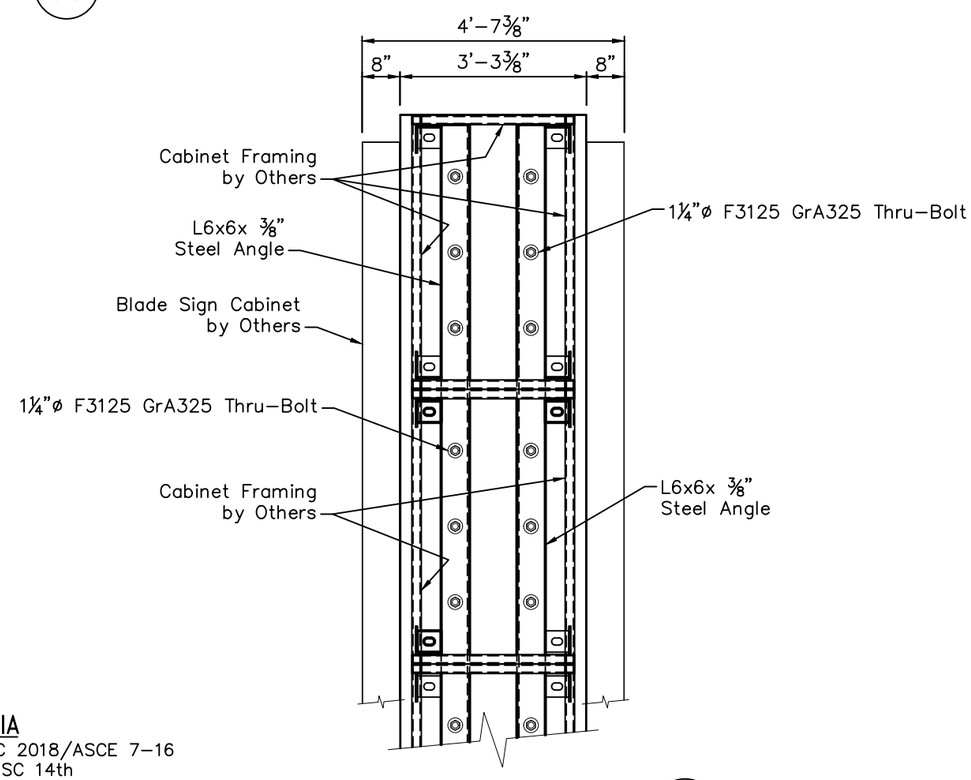

SECTION B

SCALE: ⅜" = 1'–0"

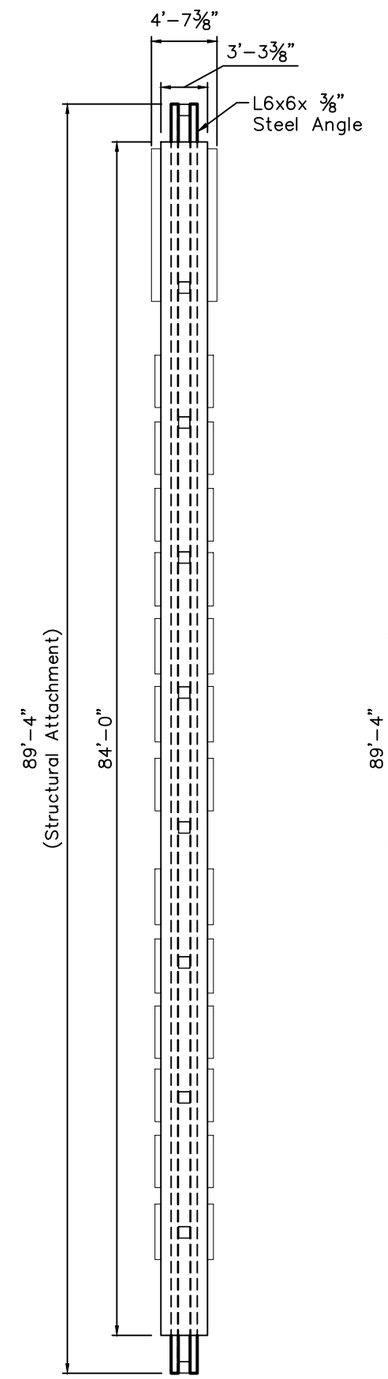

Blade Sign Profile

SCALE: 3/32" = 1'–0"

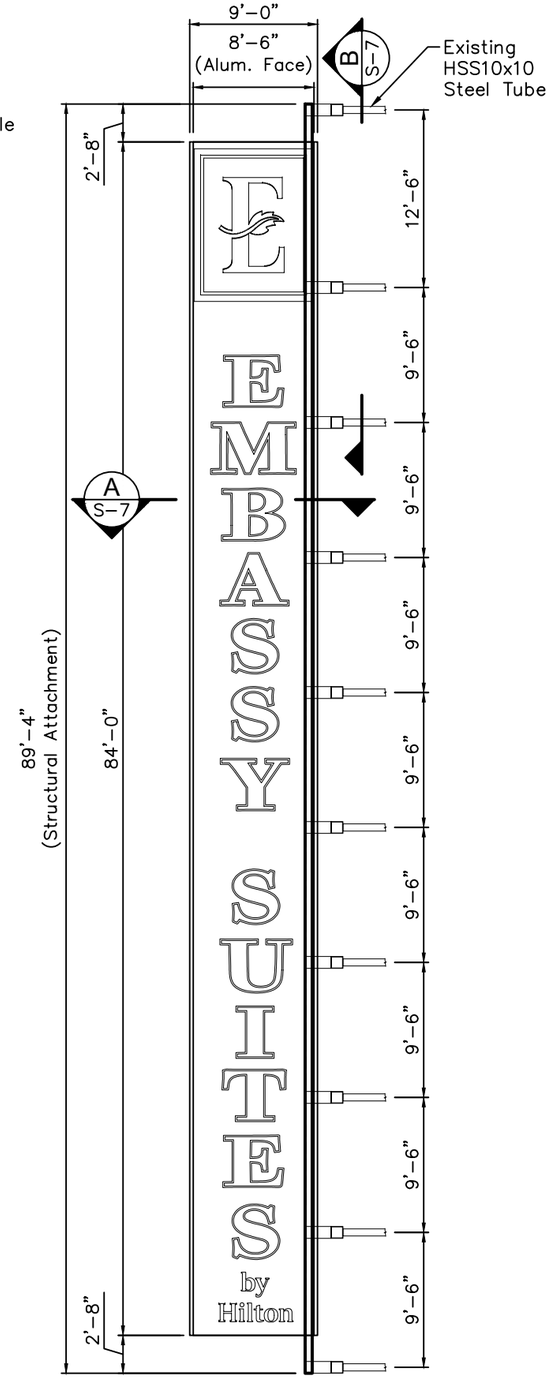

Blade Sign Elevation

SCALE: 3/32" = 1'–0"

DESIGN CRITERIA

Building Code: IBC 2018/ASCE 7–16
Analysis: LRFD–AISC 14th
Chapter 16; Section 1609.3.1
Ultimate Wind Speed V_{ult} = 115 mph
Nominal Wind Speed V_{asd} = 87 mph
Risk Category: II $V_{asd} = V_{ult}\sqrt{0.6}$
Exposure: C

ROBERTS ALLEY, JR. REGISTERED ENGINEER AGRICULTURE No. 0010209 STATE OF TENNESSEE

9/10/2021

Drawn	BLR
Checked	ERA
EAC Job#	100z4517
Filename	100x4517dwg
Created	08/26/2021

ELROD ENGINEERING
871 Seven Oaks Blvd., Suite 220
Smyrna, TN 37167
800-553-5111

CLIENT:
Boom Sign & Lighting Co.
184 Sharp Springs Rd
Smryna, TN

Sign B1: Blade Sign

Embassy Suites
710 Demonbreun St
Nashville, TN

Revisions

Sheet No. S-7

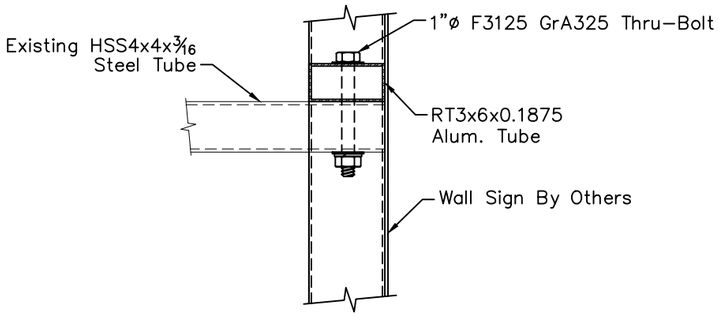

Detail 1

SCALE: 1" = 1'-0"

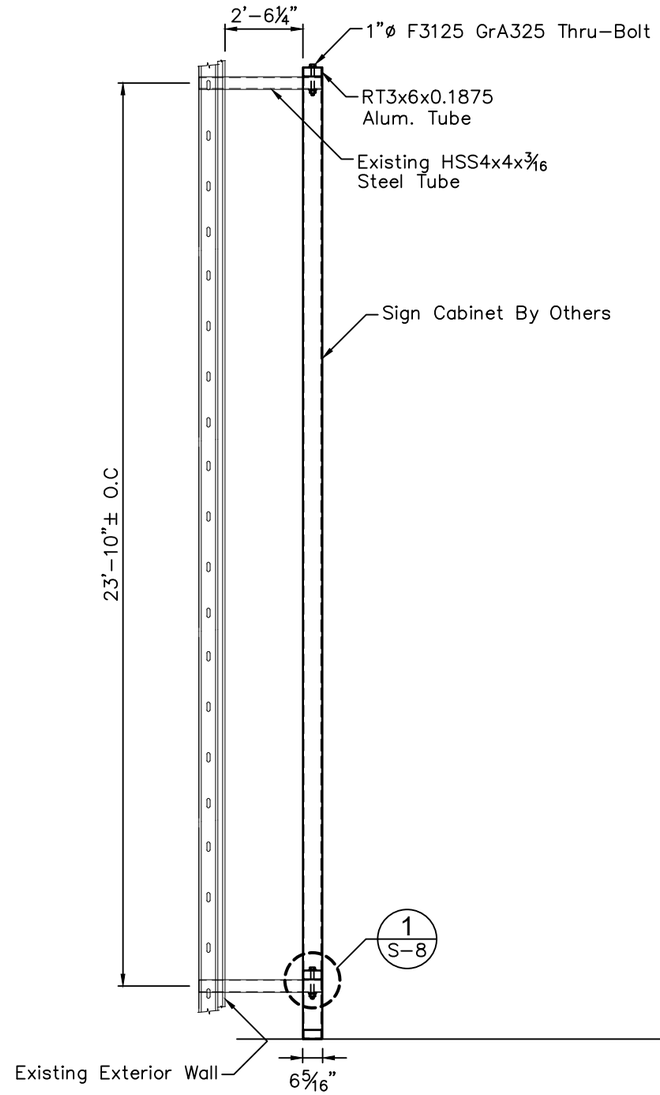

Wall Sign Profile

SCALE: 1/4" = 1'-0"

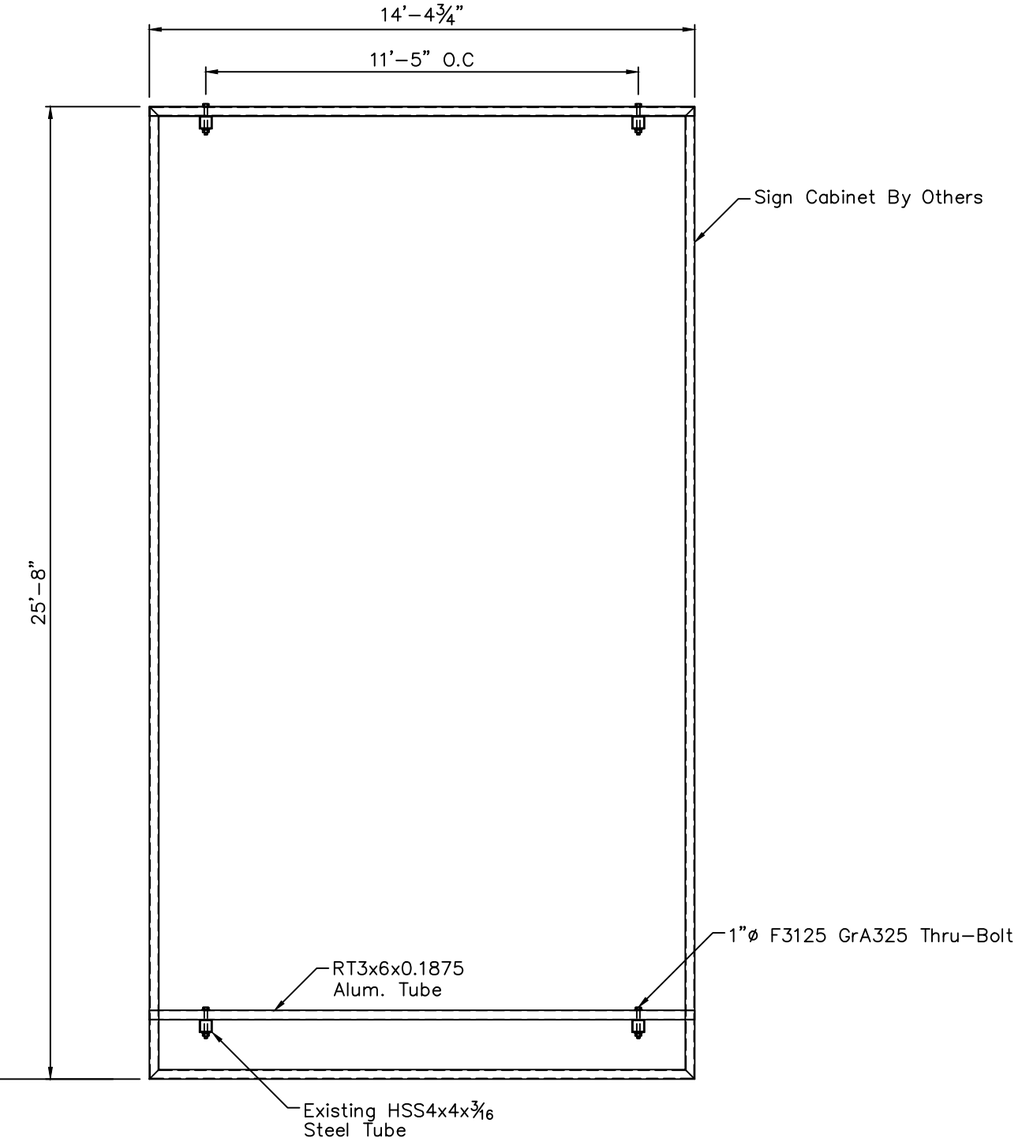

Wall Sign Elevation

SCALE: 1/4" = 1'-0"

9/10/2021

DESIGN CRITERIA

Building Code: IBC 2018/ASCE 7-16
Analysis: LRFD-AISC 14th
Chapter 16; Section 1609.3.1
Ultimate Wind Speed V_{ult} = 115 mph
Nominal Wind Speed V_{asd} = 87 mph
Risk Category: II $V_{asd} = V_{ult}\sqrt{0.6}$
Exposure: C

STEEL & ALUMINUM MEMBERS ARE TO BE PROPERLY COATED TO PREVENT GALVANIC CORROSION BETWEEN THE CONTACT OF DISSIMILAR METALS.

Drawn	BLR
Checked	ERA
EAC Job#	100z4517
Filename	100x4517dwg
Created	08/26/2021

ELROD ENGINEERING
871 Seven Oaks Blvd., Suite 220
Smyrna, TN 37167
800-553-5111

CLIENT:
Boom Sign & Lighting Co.
184 Sharp Springs Rd
Smryna, TN

Sign C1: Wall Sign

Embassy Suites
710 Demonbreun St
Nashville, TN

Revisions

Sheet No. S-8

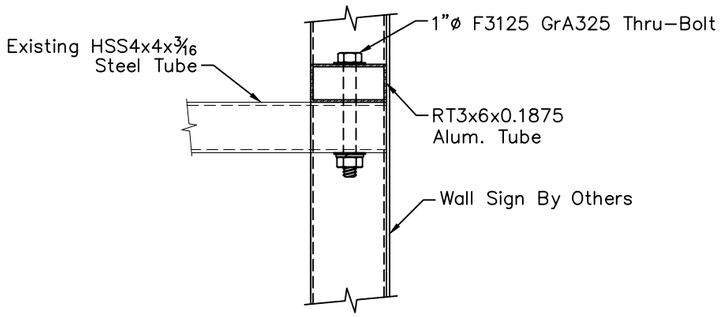

Detail 1
SCALE: 1" = 1'-0"

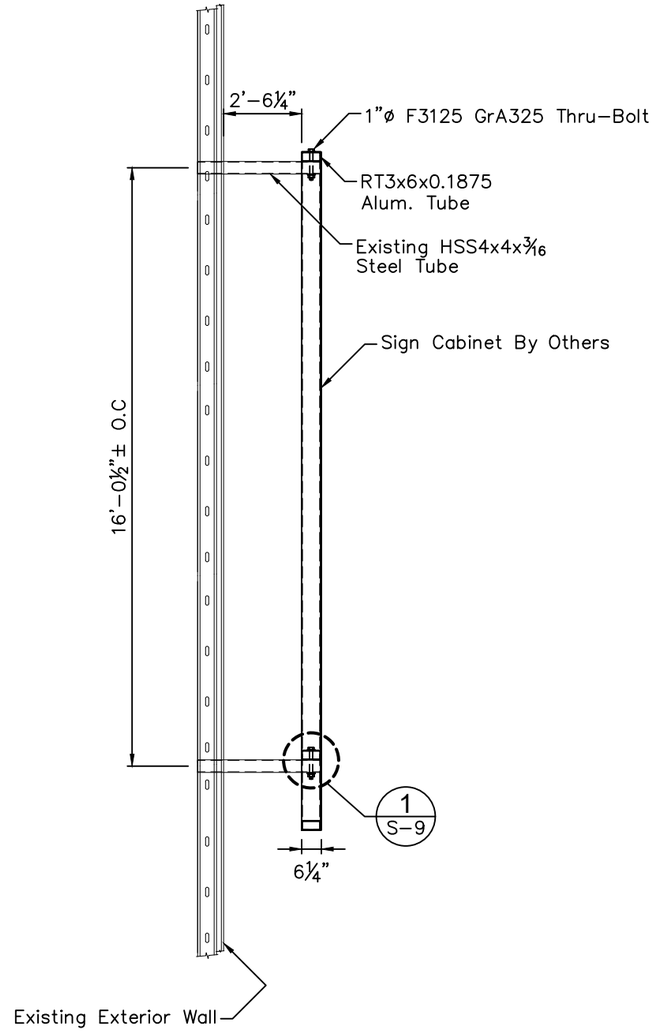

Wall Sign Profile
SCALE: ¼" = 1'-0"

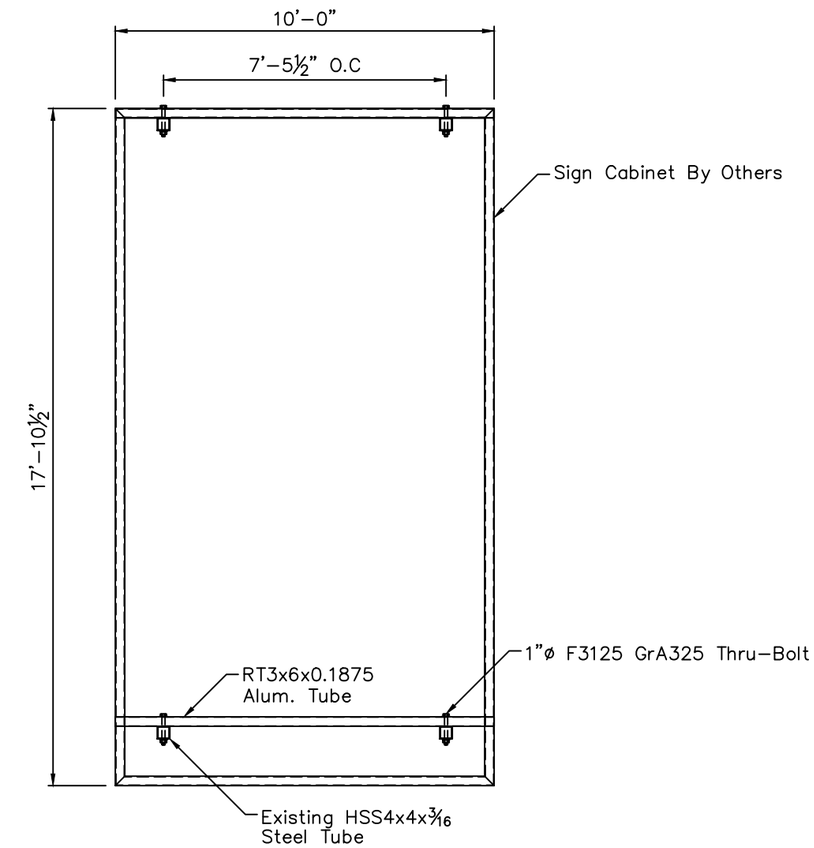

Wall Sign Elevation
SCALE: ¼" = 1'-0"

DESIGN CRITERIA

Building Code: IBC 2018/ASCE 7-16
Analysis: LRFD-AISC 14th
Chapter 16; Section 1609.3.1
Ultimate Wind Speed V_{ult} = 115 mph
Nominal Wind Speed V_{asd} = 87 mph
Risk Category: II $V_{asd} = V_{ult}\sqrt{0.6}$
Exposure: C

STEEL & ALUMINUM MEMBERS ARE TO BE PROPERLY COATED TO PREVENT GALVANIC CORROSION BETWEEN THE CONTACT OF DISSIMILAR METALS.

ROBERTS ALLEY, JR. REGISTERED ENGINEER No. 00102092 STATE OF TENNESSEE
9/10/2021

Drawn	BLR
Checked	ERA
EAC Job#	100z4517
Filename	100x4517dwg
Created	08/26/2021

ELROD ENGINEERING
871 Seven Oaks Blvd., Suite 220
Smyrna, TN 37167
800-553-5111

CLIENT:
Boom Sign & Lighting Co.
184 Sharp Springs Rd
Smryna, TN

Sign C2: Wall Sign
Embassy Suites
710 Demonbreun St
Nashville, TN

Revisions

Sheet No. S-9

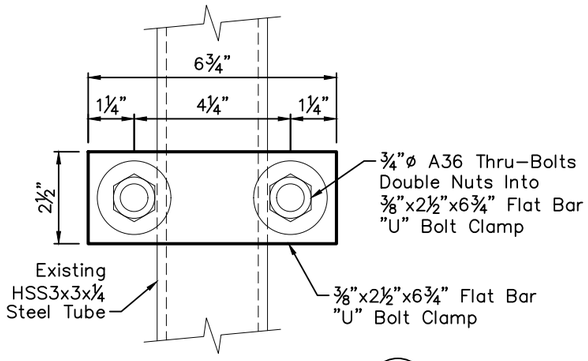

DETAIL 1
SCALE: 3" = 1'-0"

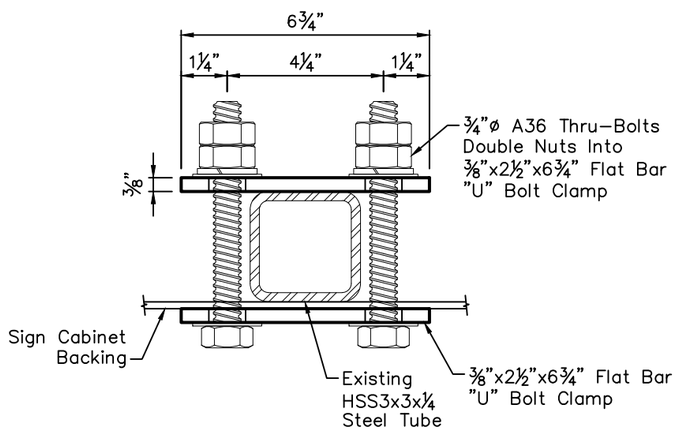

SECTION B
SCALE: 3" = 1'-0"

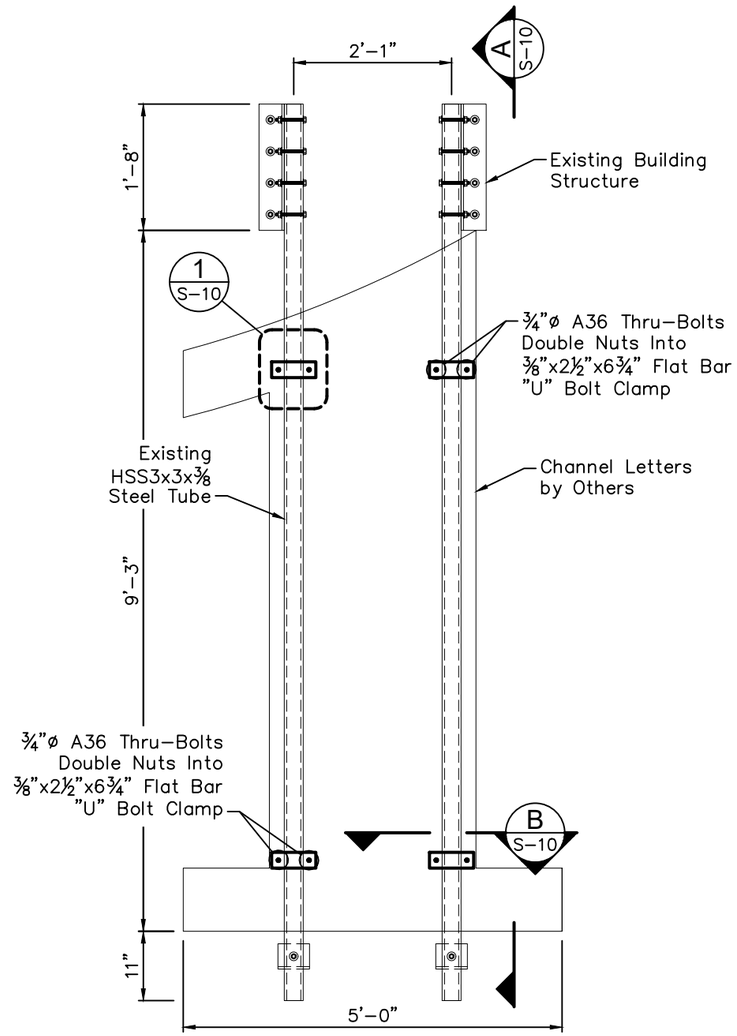

Channel Letter Elevation
SCALE: ½" = 1'-0"

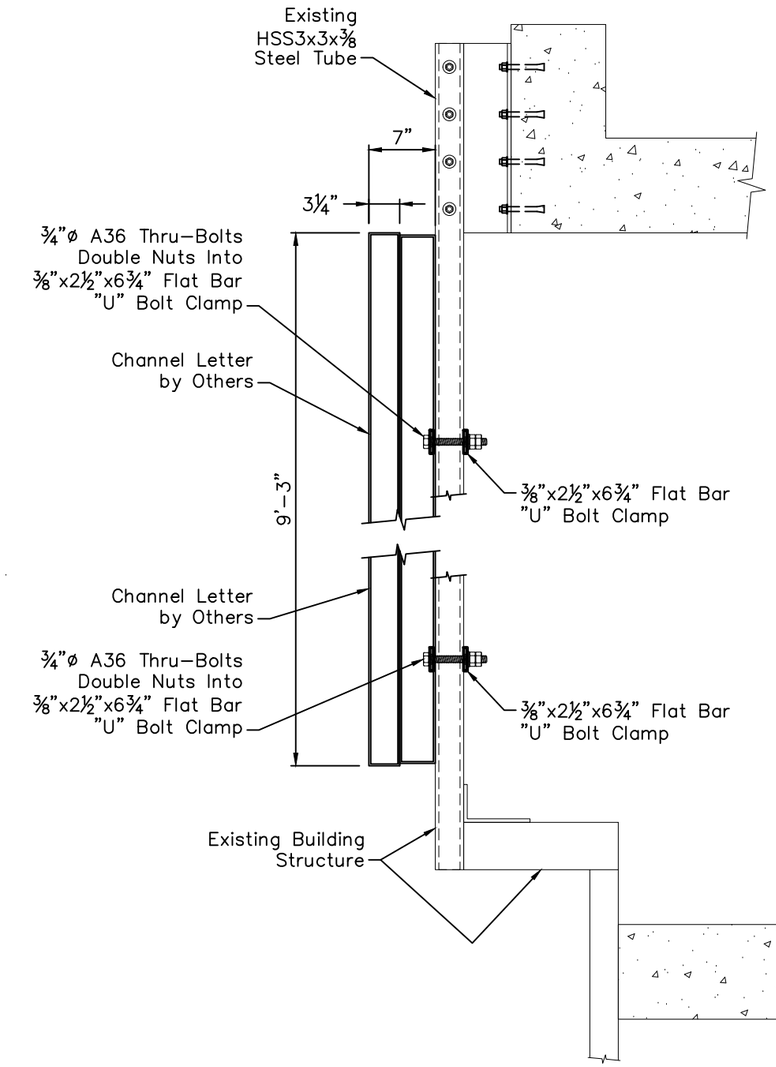

SECTION A
SCALE: ¾" = 1'-0"

DESIGN CRITERIA

Building Code: IBC 2018/ASCE 7-16
Analysis: LRFD-AISC 14th
Chapter 16; Section 1609.3.1
Ultimate Wind Speed V_{ult} = 115 mph
Nominal Wind Speed V_{asd} = 87 mph
Risk Category: II $V_{asd} = V_{ult}\sqrt{0.6}$
Exposure: C

9/10/2021

Drawn	BLR
Checked	ERA
EAC Job#	100z4517
Filename	100x4517dwg
Created	08/26/2021

ELROD ENGINEERING
871 Seven Oaks Blvd., Suite 220
Smyrna, TN 37167
800-553-5111

CLIENT:
Boom Sign & Lighting Co.
184 Sharp Springs Rd
Smryna, TN

Sign C3: Blade Sign

Embassy Suites
710 Demonbreun St
Nashville, TN

Revisions

Sheet No.
S-10

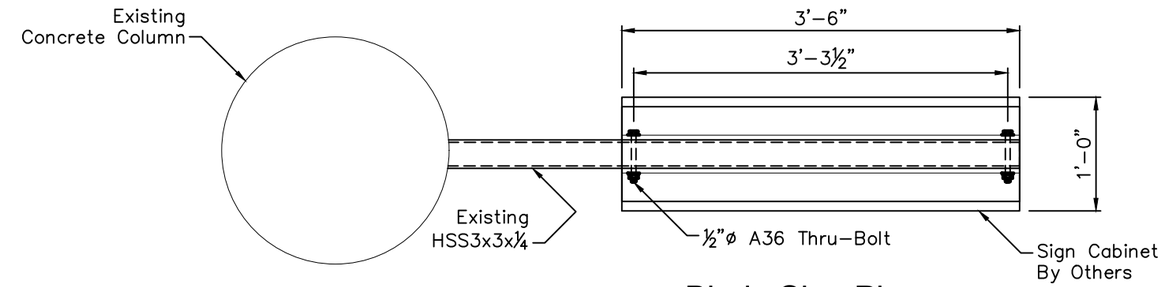

Blade Sign Plan

SCALE: ¾" = 1'–0"

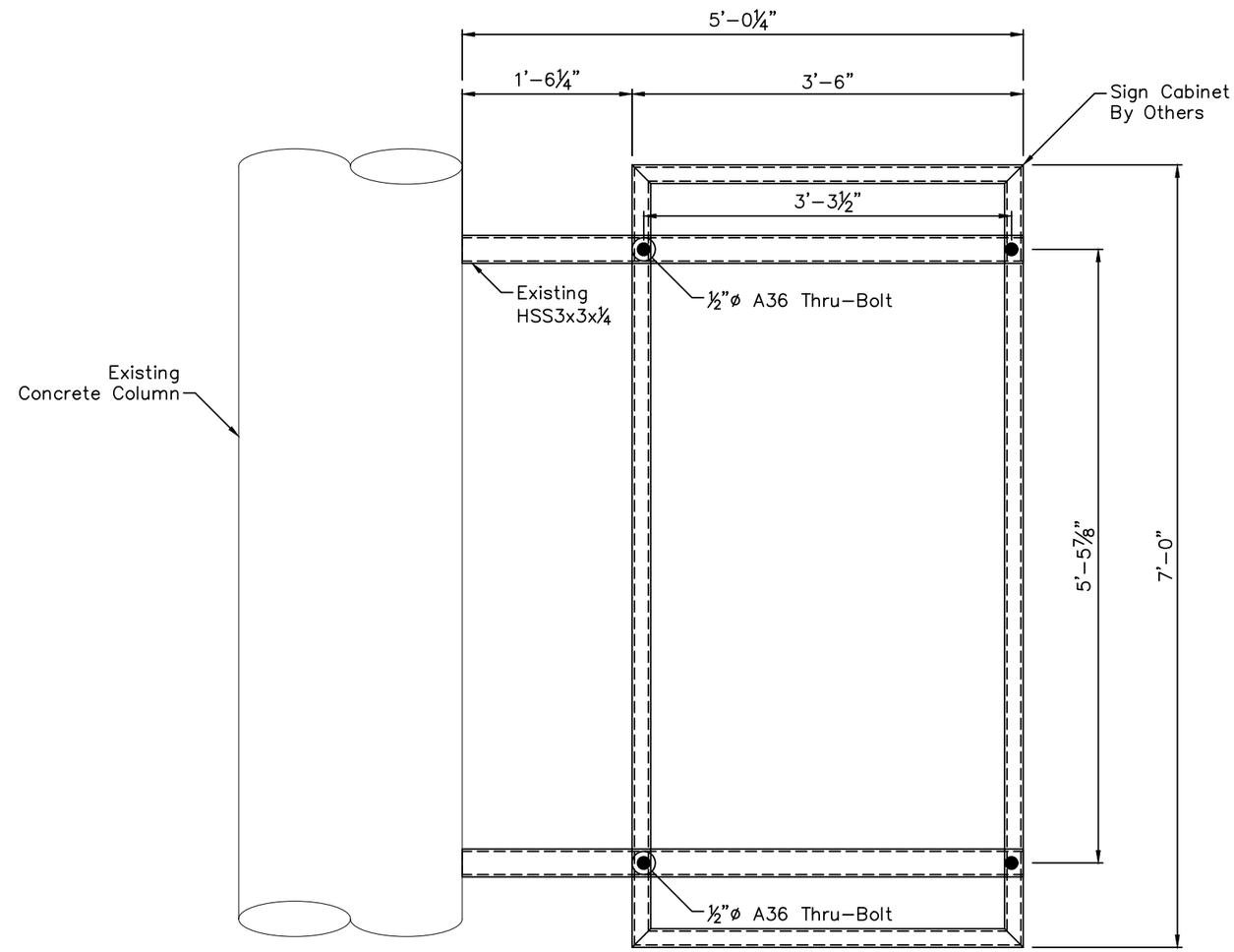

Blade Sign Elevation

SCALE: ¾" = 1'–0"

DESIGN CRITERIA

Building Code: IBC 2018/ASCE 7–16
Analysis: LRFD–AISC 14th
Chapter 16; Section 1609.3.1
Ultimate Wind Speed V_{ult} = 115 mph
Nominal Wind Speed V_{asd} = 87 mph
Risk Category: II $V_{asd} = V_{ult}\sqrt{0.6}$
Exposure: C

ROBERTS ALLEY, JR. REGISTERED ENGINEER AGRICULTURE COMMERCE No. 00102092 STATE OF TENNESSEE

9/10/2021

Drawn	BLR
Checked	ERA
EAC Job#	100z4517
Filename	100x4517dwg
Created	08/26/2021

ELROD ENGINEERING
871 Seven Oaks Blvd., Suite 220
Smyrna, TN 37167
800-553-5111

CLIENT:
Boom Sign & Lighting Co.
184 Sharp Springs Rd
Smryna, TN

Sign C4: Blade Sign

Embassy Suites
710 Demonbreun St
Nashville, TN

Revisions

Sheet No.
S-11

ELROD ENGINEERING
871 Sevens Oaks Blvd. Suite 220
Smyrna, TN 37167
800-553-5111

Design Code:	IBC 2018/ASCE 7-16	
Wind Speed:	115mph	
Risk Categ:	II	
Exposure:	C	
Wind Pressure:	78.9	PSF
Design Wind Pressure:	47.3	PSF (78.91psf+0.6W=47.346psf)
Letter Weight:	10.0	PSF (10psf+1.0W=10psf)

Project #:	100z4517	Channel Letters
Date:	9/9/2021	
Facility Ref:	Embassy Suites	
Address:	710 Demonbreun St.	
	Nashville, TN	

Sign A1

LETTER	Area (sf)	% of Load	Pressure (psf)	Shape factor	Force (lbs)	Letter Weight
Logo	25.42	100%	47.3	1	1203.68	254.23
E	4.57	100%	47.3	1	216.23	45.67
M	7.02	100%	47.3	1	332.51	70.23
B	5.80	100%	47.3	1	274.42	57.96
A	3.91	100%	47.3	1	185.12	39.10
S	2.94	100%	47.3	1	139.15	29.39
Y	3.73	100%	47.3	1	176.79	37.34
U	4.21	100%	47.3	1	199.14	42.06
I	3.13	100%	47.3	1	148.10	31.28
T	4.07	100%	47.3	1	192.70	40.70

Fastener/Anchor Type				Tension	Shear	ASD or LRFD	
3/8" Ø A36 Thru-Bolts				2402	1281	ASD	
LETTER	Allowable Tension(lbs)	Actual Tension Per Bolt(lbs)	Allowable Shear(lbs)	Actual Shear Per Bolt (lbs)	# Fasteners	Combined Tension/Shear Check	
Logo	2402	150.46	1281	31.78	8.00	0.087	< 1.00 OK
E	2402	54.06	1281	11.42	4.00	0.031	< 1.00 OK
M	2402	83.13	1281	17.56	4.00	0.048	< 1.00 OK
B	2402	68.60	1281	14.49	4.00	0.040	< 1.00 OK
A	2402	61.71	1281	13.03	3.00	0.036	< 1.00 OK
S	2402	34.79	1281	7.35	4.00	0.020	< 1.00 OK
Y	2402	58.93	1281	12.45	3.00	0.034	< 1.00 OK
U	2402	49.78	1281	10.52	4.00	0.029	< 1.00 OK
I	2402	74.05	1281	15.64	2.00	0.043	< 1.00 OK
T	2402	64.23	1281	13.57	3.00	0.037	< 1.00 OK

ROBERTS ALLEY, JR.
REGISTERED ENGINEER
AGRICULTURE
No. 00102092
STATE OF TENNESSEE

9/10/21

ELROD ENGINEERING
871 Sevens Oaks Blvd. Suite 220
Smyrna, TN 37167
800-553-5111

Design Code:	IBC 2018/ASCE 7-16	
Wind Speed:	115mph	
Risk Categ:	II	
Exposure:	C	
Wind Pressure:	36.3	PSF
Design Wind Pressure:	21.8	PSF (36.34psf+0.6W=21.804psf)
Letter Weight:	10.0	PSF (10psf+1.0W=10psf)

Project #:	100z4517	Channel Letters
Date:	9/9/2021	
Facility Ref:	Embassy Suites	
Address:	710 Demonbreun St.	
	Nashville, TN	

Sign A2

LETTER	Area (sf)	% of Load	Pressure (psf)	Shape factor	Force (lbs)	Letter Weight
E	0.56	100%	21.8	1	12.19	5.59
M	0.86	100%	21.8	1	18.73	8.59
B	0.68	100%	21.8	1	14.85	6.81
A	0.48	100%	21.8	1	10.42	4.78
S	0.46	100%	21.8	1	9.94	4.56
Y	0.50	100%	21.8	1	10.88	4.99
U	0.51	100%	21.8	1	11.21	5.14
I	0.38	100%	21.8	1	8.35	3.83
T	0.50	100%	21.8	1	10.86	4.98

Fastener/Anchor Type				Tension	Shear	ASD or LRFD	
1/4" Ø A36 Thru-Bolts				1067	569	ASD	
LETTER	Allowable Tension(lbs)	Actual Tension Per Bolt(lbs)	Allowable Shear(lbs)	Actual Shear Per Bolt (lbs)	# Fasteners	Combined Tension/Shear Check	
E	1067	3.05	569	1.40	4.00	0.005	< 1.00 OK
M	1067	4.68	569	2.15	4.00	0.008	< 1.00 OK
B	1067	3.71	569	1.70	4.00	0.006	< 1.00 OK
A	1067	3.47	569	1.59	3.00	0.006	< 1.00 OK
S	1067	2.49	569	1.14	4.00	0.004	< 1.00 OK
Y	1067	2.72	569	1.25	4.00	0.005	< 1.00 OK
U	1067	3.74	569	1.71	3.00	0.007	< 1.00 OK
I	1067	2.09	569	0.96	4.00	0.004	< 1.00 OK
T	1067	2.17	569	1.00	5.00	0.004	< 1.00 OK

Elrod Engineering q

Project :	Embassy Suites	**File :**	100x4517
Subject :	A1: Channel Letters	**Date :**	9/3/2021
Location :	Nashville, TN	**Eng :**	dlr

Desgin Wind Pressure, p, Equation 30.5-1 (ASCE 7-16).

System Type	Structure Type	Equation
Components and Cladding Envelope Procedure	Buildings with h > 60 ft	*p* : q·(GCp) - qi·(GCpi) q : external velocity pressure qi : internal velocity pressure Gcp : Figure 30.5-1 GCpi : Table 26.13-1

Velocity Pressure Calculations:

Velocity pressure is calculated in accordance with section 26.10.

qz = Velocity pressure @ height (z)

qz = Constant · Kz · Kzt · Kd · V ² (Eq 26.10-1)

Where : Constant	=	Numerical Constant	(Section C26.10)
	=	½ · [(Air density lb/ cu ft) / (32.2 ft/s²)] · [(mi/h)(5280 ft/mi) · (1 hr/3600 s)] ²	
	=	0.00256	
Mean Sea Level	=	0.00 ft	
Air Density @MSL	=	0.0765 lb/cu ft	(Table C26.9-1)
Occupancy Category	=	II	(Table 1.5-1)
Exposure Category	=	C	(Section 26.7.3)
α	=	9.50	(Table 26.11-1)
Zg	=	900.00 ft	(Table 26.11-1)
Basic Wind Speed	=	115.00 mph	(Figure 26.5-1&2 A-D)
Mean Roof Height	=	410.00 ft	
Kh	=	Velocity pressure coefficient @ height h	
	=	2.01·(Z/Zg) ^ (2/α) for 15 ft <= Z <= Zg	(Table 26.10-1)
	=	2.01 · (15/Zg) ^ (2/α) for Z < 15 ft	
	=	1.70	
Kz at highest opening	=	Not Used	
	=		
Kzt	=	Topographic factor	(Figure 26.8-1)
	=	(1 + K1 · K2 · K3) ²	
Topography	=	None	
Kzt @h	=	1.00	
Kd	=	Wind directionality factor	(Table 26.6-1)
	=	0.85	
qh	=	49.02 (psf)	

Elrod Engineering q

Project :	Embassy Suites	**File :**	100x4517
Subject :	A1: Channel Letters	**Date :**	9/3/2021
Location :	Nashville, TN	**Eng :**	dlr

Internal Pressure Coefficient, GCpi, Table 26.11-1

Enclosure Classification	GCpi+	GCPi-	Aog (sq. ft.)	Vi (cu. ft.)	Ri	GCpi+	GCPi-
Enclosed Buildings	0.18	-0.18	60	5,000,000	1.00	0.18	-0.18

External Pressure Coefficient, GCp, Figure 30.5-1.

Zone	Area (sq. ft.)	Angle (deg)	GCp+	GCp-
1	1.00	0.00		-1.40
2	1.00	0.00		-2.30
3	1.00	0.00		-3.20
4	43.00	All	0.83	-0.85
5	43.00	All	0.83	-1.61
1 - Overhang	1.00	0.00		-1.70
2 - Overhang	1.00	0.00		-1.70
3 - Overhang	1.00	0.00		-2.80

Design Wind Pressure, p. (psf) , Equation 30.5-1 and Equation 30.9-1 for Overhangs.

Negative Wall and Roof Pressures

Zone	q = qh (psf)	qi+ = qh (psf)	qi- = qh (psf)	GCp-	GCpi+	GCpi-	p+ (psf)	p- (psf)
1	49.02	49.02	49.02	-1.40	0.18	-0.18	-77.45	-59.80
2	49.02	49.02	49.02	-2.30	0.18	-0.18	-121.57	-103.92
3	49.02	49.02	49.02	-3.20	0.18	-0.18	-165.68	-148.04
4	49.02	49.02	49.02	-0.85	0.18	-0.18	-50.61	-32.96
5	49.02	49.02	49.02	-1.61	0.18	-0.18	-87.73	-70.09
1 - Overhang	49.02	49.02	49.02	-1.70	0.18	-0.18	-92.16	-74.51
2 - Overhang	49.02	49.02	49.02	-1.70	0.18	-0.18	-92.16	-74.51
3 - Overhang	49.02	49.02	49.02	-2.80	0.18	-0.18	-146.08	-128.43

p+ uses GCpi+ *p- uses GCpi-*

Elrod Engineering q

Project :	Embassy Suites	**File :**	100x4517
Subject :	A1: Channel Letters	**Date :**	9/3/2021
Location :	Nashville, TN	**Eng :**	dlr

Design Windward Wall Wind Pressures, p, Equation 30.5-1 for Zone 4.

p+ uses GCpi+ *p- uses GCpi-*

Heights (feet)	Kz	Kzt	kd	q = qz (psf)	qi+ = qh (psf)	qi- = qh (psf)	GCp	GCpi+	GCpi-	p+ (psf)	p- (psf)
400.01 - 410.00	1.70	1.00	0.85	49.02	49.02	49.02	0.83	0.18	-0.18	31.80	49.44
350.01 - 400.00	1.69	1.00	0.85	48.76	49.02	49.02	0.83	0.18	-0.18	31.59	49.23
300.01 - 350.00	1.65	1.00	0.85	47.41	49.02	49.02	0.83	0.18	-0.18	30.47	48.11
250.01 - 300.00	1.59	1.00	0.85	45.90	49.02	49.02	0.83	0.18	-0.18	29.21	46.86
200.01 - 250.00	1.53	1.00	0.85	44.17	49.02	49.02	0.83	0.18	-0.18	27.78	45.43
180.01 - 200.00	1.46	1.00	0.85	42.14	49.02	49.02	0.83	0.18	-0.18	26.10	43.75
160.01 - 180.00	1.43	1.00	0.85	41.22	49.02	49.02	0.83	0.18	-0.18	25.33	42.98
140.01 - 160.00	1.40	1.00	0.85	40.21	49.02	49.02	0.83	0.18	-0.18	24.50	42.14
120.01 - 140.00	1.36	1.00	0.85	39.10	49.02	49.02	0.83	0.18	-0.18	23.57	41.22
100.01 - 120.00	1.32	1.00	0.85	37.85	49.02	49.02	0.83	0.18	-0.18	22.54	40.19
90.01 - 100.00	1.27	1.00	0.85	36.42	49.02	49.02	0.83	0.18	-0.18	21.36	39.00
80.01 - 90.00	1.24	1.00	0.85	35.62	49.02	49.02	0.83	0.18	-0.18	20.70	38.34
70.01 - 80.00	1.21	1.00	0.85	34.75	49.02	49.02	0.83	0.18	-0.18	19.97	37.62
60.01 - 70.00	1.17	1.00	0.85	33.79	49.02	49.02	0.83	0.18	-0.18	19.17	36.82
50.01 - 60.00	1.14	1.00	0.85	32.71	49.02	49.02	0.83	0.18	-0.18	18.28	35.93
40.01 - 50.00	1.09	1.00	0.85	31.48	49.02	49.02	0.83	0.18	-0.18	17.26	34.91
30.01 - 40.00	1.04	1.00	0.85	30.03	49.02	49.02	0.83	0.18	-0.18	16.06	33.71
25.01 - 30.00	0.98	1.00	0.85	28.27	49.02	49.02	0.83	0.18	-0.18	14.60	32.25
20.01 - 25.00	0.95	1.00	0.85	27.20	49.02	49.02	0.83	0.18	-0.18	13.72	31.36
15.01 - 20.00	0.90	1.00	0.85	25.95	49.02	49.02	0.83	0.18	-0.18	12.68	30.33
0.00 - 15.00	0.85	1.00	0.85	24.43	49.02	49.02	0.83	0.18	-0.18	11.42	29.07

Elrod Engineering q

Project :	Embassy Suites	**File :**	100x4517
Subject :	A1: Channel Letters	**Date :**	9/3/2021
Location :	Nashville, TN	**Eng :**	dlr

Design Windward Wall Wind Pressures, p, Equation 30.5-1 for Zone 5.

p+ uses GCpi+ *p- uses GCpi-*

Heights (feet)	Kz	Kzt	kd	q = qz (psf)	qi+ = qh (psf)	qi- = qh (psf)	GCp	GCpi+	GCpi-	p+ (psf)	p- (psf)
400.01 - 410.00	1.70	1.00	0.85	49.02	49.02	49.02	0.83	0.18	-0.18	31.80	49.44
350.01 - 400.00	1.69	1.00	0.85	48.76	49.02	49.02	0.83	0.18	-0.18	31.59	49.23
300.01 - 350.00	1.65	1.00	0.85	47.41	49.02	49.02	0.83	0.18	-0.18	30.47	48.11
250.01 - 300.00	1.59	1.00	0.85	45.90	49.02	49.02	0.83	0.18	-0.18	29.21	46.86
200.01 - 250.00	1.53	1.00	0.85	44.17	49.02	49.02	0.83	0.18	-0.18	27.78	45.43
180.01 - 200.00	1.46	1.00	0.85	42.14	49.02	49.02	0.83	0.18	-0.18	26.10	43.75
160.01 - 180.00	1.43	1.00	0.85	41.22	49.02	49.02	0.83	0.18	-0.18	25.33	42.98
140.01 - 160.00	1.40	1.00	0.85	40.21	49.02	49.02	0.83	0.18	-0.18	24.50	42.14
120.01 - 140.00	1.36	1.00	0.85	39.10	49.02	49.02	0.83	0.18	-0.18	23.57	41.22
100.01 - 120.00	1.32	1.00	0.85	37.85	49.02	49.02	0.83	0.18	-0.18	22.54	40.19
90.01 - 100.00	1.27	1.00	0.85	36.42	49.02	49.02	0.83	0.18	-0.18	21.36	39.00
80.01 - 90.00	1.24	1.00	0.85	35.62	49.02	49.02	0.83	0.18	-0.18	20.70	38.34
70.01 - 80.00	1.21	1.00	0.85	34.75	49.02	49.02	0.83	0.18	-0.18	19.97	37.62
60.01 - 70.00	1.17	1.00	0.85	33.79	49.02	49.02	0.83	0.18	-0.18	19.17	36.82
50.01 - 60.00	1.14	1.00	0.85	32.71	49.02	49.02	0.83	0.18	-0.18	18.28	35.93
40.01 - 50.00	1.09	1.00	0.85	31.48	49.02	49.02	0.83	0.18	-0.18	17.26	34.91
30.01 - 40.00	1.04	1.00	0.85	30.03	49.02	49.02	0.83	0.18	-0.18	16.06	33.71
25.01 - 30.00	0.98	1.00	0.85	28.27	49.02	49.02	0.83	0.18	-0.18	14.60	32.25
20.01 - 25.00	0.95	1.00	0.85	27.20	49.02	49.02	0.83	0.18	-0.18	13.72	31.36
15.01 - 20.00	0.90	1.00	0.85	25.95	49.02	49.02	0.83	0.18	-0.18	12.68	30.33
0.00 - 15.00	0.85	1.00	0.85	24.43	49.02	49.02	0.83	0.18	-0.18	11.42	29.07

ELROD ENGINEERING
871 Sevens Oaks Blvd. Suite 220
Smyrna, TN 37167
800-553-5111

Design Code:	IBC 2018/ASCE 7-16	
Wind Speed:	115mph	
Risk Categ:	II	
Exposure:	C	
Wind Pressure:	36.3	PSF
Design Wind Pressure:	21.8	PSF (36.34psf+0.6W=21.804psf)
Letter Weight:	10.0	PSF (10psf+1.0W=10psf)

Project #:	100z4517	Channel Letters
Date:	9/9/2021	
Facility Ref:	Embassy Suites	
Address:	710 Demonbreun St.	
	Nashville, TN	

Sign A3

LETTER	Area (sf)	% of Load	Pressure (psf)	Shape factor	Force (lbs)	Letter Weight
E	0.56	100%	21.8	1	12.19	5.59
M	0.86	100%	21.8	1	18.73	8.59
B	0.68	100%	21.8	1	14.85	6.81
A	0.48	100%	21.8	1	10.42	4.78
S	0.46	100%	21.8	1	9.94	4.56
Y	0.50	100%	21.8	1	10.88	4.99
U	0.51	100%	21.8	1	11.21	5.14
I	0.38	100%	21.8	1	8.35	3.83
T	0.50	100%	21.8	1	10.86	4.98

Fastener/Anchor Type				Tension	Shear	ASD or LRFD	
3/8"Ø-16 Snap-Toggle www.toggler.com				122	101.5	ASD	
LETTER	Allowable Tension(lbs)	Actual Tension Per Bolt(lbs)	Allowable Shear(lbs)	Actual Shear Per Bolt (lbs)	# Fasteners	Combined Tension/Shear Check	
E	122	3.05	101.5	1.40	4.00	0.039	< 1.00 OK
M	122	3.75	101.5	1.72	5.00	0.048	< 1.00 OK
B	122	3.71	101.5	1.70	4.00	0.047	< 1.00 OK
A	122	3.47	101.5	1.59	3.00	0.044	< 1.00 OK
S	122	2.49	101.5	1.14	4.00	0.032	< 1.00 OK
Y	122	2.72	101.5	1.25	4.00	0.035	< 1.00 OK
U	122	3.74	101.5	1.71	3.00	0.048	< 1.00 OK
I	122	2.09	101.5	0.96	4.00	0.027	< 1.00 OK
T	122	2.17	101.5	1.00	5.00	0.028	< 1.00 OK

Elrod Engineering q

Project :	Embassy Suites	**File :**	100x4517
Subject :	A3: Channel Letters	**Date :**	9/3/2021
Location :	Nashville, TN	**Eng :**	dlr

Desgin Wind Pressure, p, Equation 30.3-1 (ASCE 7-16).

System Type	Structure Type	Equation
Components and Cladding (Envelope Procedure)	Low-Rise Buildings with h <= 60 ft Gabled & Hipped Roofs	*p* : qh[(GCp) – (GCpi)] qh : velocity pressure at h GCp : Figures 30.3-1 & 30.3-2 GCpi : Table 26.13-1

Velocity Pressure Calculations:

Velocity pressure qh is calculated in accordance with section 26.10.

qh = Velocity pressure @ mean roof height (h)

qh = Constant · Kh · Kzt · Kd · V ² (Eq 26.10-1)

Where : Constant	=	Numerical Constant	(Section C26.10)
	=	½ · [(Air density lb/ cu ft) / (32.2 ft/s²)] · [(mi/h)(5280 ft/mi) · (1 hr/3600 s)] ²	
	=	0.00256	
Mean Sea Level	=	0.00 ft	
Air Density @MSL	=	0.0765 lb/cu ft	(Table C26.9-1)
Occupancy Category	=	II	(Table 1.5-1)
Exposure Category	=	C	(Section 26.7.3)
α	=	9.50	(Table 26.11-1)
Zg	=	900.00 ft	(Table 26.11-1)
Basic Wind Speed	=	115.00 mph	(Figure 26.5-1&2 A-D)
Mean Roof Height	=	20.00 ft	
Where : Kh	=	Velocity pressure coefficient @ height h	
	=	2.01·(Z/Zg) ^ (2/α) for 15 ft <= Z <= Zg	(Table 26.10-1)
	=	2.01 · (15/Zg) ^ (2/α) for Z < 15 ft	
	=	0.90	
Kzt	=	Topographic factor	(Figure 26.8-1)
	=	(1 + K1 · K2 · K3) ²	
Topography	=	None	
Kzt @h	=	1.00	
Kd	=	Wind directionality factor	(Table 26.6-1)
	=	0.85	
qh	=	25.95 (psf)	

Elrod Engineering q

Project :	Embassy Suites	**File :**	100x4517
Subject :	A3: Channel Letters	**Date :**	9/3/2021
Location :	Nashville, TN	**Eng :**	dlr

Internal Pressure Coefficient, GCpi, Table 26.11-1

Enclosure Classification	GCpi+	GCPi-	Aog (sq. ft.)	Vi (cu. ft.)	Ri	GCpi+	GCPi-
Enclosed Buildings	0.18	-0.18	60	5,000,000	1.00	0.18	-0.18

External Pressure Coefficients, GCp, Figure 30.3-2 (roof) and Figure 30.3-1 (walls)

Zone	Area (sq. ft.)	Angle (deg)	GCp+	GCp-	GCp R. O.
1'	1.00	0.00	0.30	-0.90	-1.70
1	1.00	0.00	0.30	-1.70	0.00
2	1.00	0.00	0.30	-2.30	-2.30
3	1.00	0.00	0.30	-3.20	-3.20
4	7.50	All	1.00	-1.10	-
5	7.50	All	1.00	-1.40	-

Values of GCp for walls (zone 4 & 5) were reduced by 10%

Design Wind Pressure, p, Equation 30.3-1.

Zone	qh (psf)	GCp+	GCp-	GCpi+	GCpi-	p1+ (psf)	p2+ (psf)	p1- (psf)	p2- (psf)
1'	25.95	0.30	-0.90	0.18	-0.18	3.11	12.46	3.11	-18.69
1	25.95	0.30	-1.70	0.18	-0.18	3.11	12.46	-48.79	-39.45
2	25.95	0.30	-2.30	0.18	-0.18	3.11	12.46	-64.37	-55.02
3	25.95	0.30	-3.20	0.18	-0.18	3.11	12.46	-87.72	-78.38
4	25.95	1.00	-1.10	0.18	-0.18	21.28	30.63	-33.22	-23.88
5	25.95	1.00	-1.40	0.18	-0.18	21.28	30.63	-41.01	-31.66

Positive and negative values of external and internal pressures are combined to determine four possible pressures:

p1+ uses GCp+ and GCpi+ *p1- uses GCp- and GCpi+*

p2+ uses GCp+ and GCpi- *p2- uses GCp- and GCpi-*

Roof Overhang Pressure, p, Equation 30.9-1.

Wind pressures acting on the roof overhang (soffit pressures not included).

Zone	qh (psf)	GCp- (R.O.)	GCpi+	GCpi-	p1- (psf)	p2- (psf)
1'	25.95	-1.70	0.18	-0.18	-48.79	-39.45
1	25.95	0.00	0.18	-0.18	-4.67	4.67
2	25.95	-2.30	0.18	-0.18	-64.37	-55.02
3	25.95	-3.20	0.18	-0.18	-87.72	-78.38

ELROD ENGINEERING
871 Sevens Oaks Blvd. Suite 220
Smyrna, TN 37167
800-553-5111

Design Code:	IBC 2018/ASCE 7-16	
Wind Speed:	115mph	
Risk Categ:	II	
Exposure:	C	
Wind Pressure:	36.3	PSF
Design Wind Pressure:	21.8	PSF (36.34psf+0.6W=21.804psf)
Letter Weight:	10.0	PSF (10psf+1.0W=10psf)

Project #:	100z4517	Channel Letters
Date:	9/9/2021	
Facility Ref:	Embassy Suites	
Address:	710 Demonbreun St.	
	Nashville, TN	

Sign A6 - Channel Letters to Raceway

LETTER	Area (sf)	% of Load	Pressure (psf)	Shape factor	Force (lbs)	Letter Weight
G	1.09	100%	21.8	1	23.77	10.90
O	1.02	100%	21.8	1	22.24	10.20
D	0.95	100%	21.8	1	20.71	9.50
C	0.80	100%	21.8	1	17.47	8.01
I	0.47	100%	21.8	1	10.25	4.70
T	0.61	100%	21.8	1	13.30	6.10
Z	0.88	100%	21.8	1	19.19	8.80
E	0.85	100%	21.8	1	18.53	8.50
N	1.10	100%	21.8	1	23.98	11.00
F	0.68	100%	21.8	1	14.83	6.80
Small O	0.46	100%	21.8	1	9.94	4.56
Dot	0.08	100%	21.8	1	1.74	0.80

Fastener/Anchor Type				Tension	Shear	ASD or LRFD	
1/4"Ø A36 Thru-Bolts				1067	569	ASD	
LETTER	Allowable Tension(lbs)	Actual Tension Per Bolt(lbs)	Allowable Shear(lbs)	Actual Shear Per Bolt (lbs)	# Fasteners	Combined Tension/Shear Check	
G	1067	5.94	569	2.73	4.00	0.010	< 1.00 OK
O	1067	5.56	569	2.55	4.00	0.010	< 1.00 OK
D	1067	5.18	569	2.38	4.00	0.009	< 1.00 OK
C	1067	4.37	569	2.00	4.00	0.008	< 1.00 OK
I	1067	5.12	569	2.35	2.00	0.009	< 1.00 OK
T	1067	4.43	569	2.03	3.00	0.008	< 1.00 OK
Z	1067	4.80	569	2.20	4.00	0.008	< 1.00 OK
E	1067	4.63	569	2.13	4.00	0.008	< 1.00 OK
N	1067	6.00	569	2.75	4.00	0.010	< 1.00 OK
F	1067	4.94	569	2.27	3.00	0.009	< 1.00 OK
Small O	1067	4.97	569	2.28	2.00	0.009	< 1.00 OK
Dot	1067	0.87	569	0.40	2.00	0.002	< 1.00 OK

ELROD ENGINEERING
871 Sevens Oaks Blvd. Suite 220
Smyrna, TN 37167
800-553-5111

Design Code:	IBC 2018/ASCE 7-16	
Wind Speed:	115mph	
Risk Categ:	II	
Exposure:	C	
Wind Pressure:	36.3	PSF
Design Wind Pressure:	21.8	PSF (36.34psf+0.6W=21.804psf)
Letter Weight:	10.0	PSF (10psf+1.0W=10psf)

Project #:	100z4517	Channel Letters
Date:	9/9/2021	
Facility Ref:	Embassy Suites	
Address:	710 Demonbreun St.	
	Nashville, TN	

Sign A6 - Ch. Letters & Raceway to Existing Structure

LETTER	Area (sf)	% of Load	Pressure (psf)	Shape factor	Force (lbs)	Letter Weight
"GOOD CITIZEN"	10.40	100%	21.8	1	226.76	104.00

Fastener/Anchor Type				Tension	Shear	ASD or LRFD	
1/2"ø A36 Thru-Bolts				4271	2277	ASD	
LETTER	Allowable Tension(lbs)	Actual Tension Per Bolt(lbs)	Allowable Shear(lbs)	Actual Shear Per Bolt (lbs)	# Fasteners	Combined Tension/Shear Check	
"GOOD CITIZEN"	4271	28.35	2277	13.00	8.00	0.012	< 1.00 OK

Elrod Engineering q

Project :	Embassy Suites	**File :**	100x4517
Subject :	A6: Channel Letters	**Date :**	9/3/2021
Location :	Nashville, TN	**Eng :**	dlr

Desgin Wind Pressure, p, Equation 30.3-1 (ASCE 7-16).

System Type	Structure Type	Equation
Components and Cladding (Envelope Procedure)	Low-Rise Buildings with h <= 60 ft Gabled & Hipped Roofs	*p* : qh[(GCp) – (GCpi)] qh : velocity pressure at h GCp : Figures 30.3-1 & 30.3-2 GCpi : Table 26.13-1

Velocity Pressure Calculations:

Velocity pressure qh is calculated in accordance with section 26.10.

qh = Velocity pressure @ mean roof height (h)

qh = Constant · Kh · Kzt · Kd · V ² (Eq 26.10-1)

Where : Constant	=	Numerical Constant	(Section C26.10)
	=	½ · [(Air density lb/ cu ft) / (32.2 ft/s²)] · [(mi/h)(5280 ft/mi) · (1 hr/3600 s)] ²	
	=	0.00256	
Mean Sea Level	=	0.00 ft	
Air Density @MSL	=	0.0765 lb/cu ft	(Table C26.9-1)
Occupancy Category	=	II	(Table 1.5-1)
Exposure Category	=	C	(Section 26.7.3)
α	=	9.50	(Table 26.11-1)
Zg	=	900.00 ft	(Table 26.11-1)
Basic Wind Speed	=	115.00 mph	(Figure 26.5-1&2 A-D)
Mean Roof Height	=	20.00 ft	
Where : Kh	=	Velocity pressure coefficient @ height h	
	=	2.01·(Z/Zg) ^ (2/α) for 15 ft <= Z <= Zg	(Table 26.10-1)
	=	2.01 · (15/Zg) ^ (2/α) for Z < 15 ft	
	=	0.90	
Kzt	=	Topographic factor	(Figure 26.8-1)
	=	(1 + K1 · K2 · K3) ²	
Topography	=	None	
Kzt @h	=	1.00	
Kd	=	Wind directionality factor	(Table 26.6-1)
	=	0.85	
qh	=	25.95 (psf)	

Elrod Engineering q

Project :	Embassy Suites	**File :**	100x4517
Subject :	A6: Channel Letters	**Date :**	9/3/2021
Location :	Nashville, TN	**Eng :**	dlr

Internal Pressure Coefficient, GCpi, Table 26.11-1

Enclosure Classification	GCpi+	GCPi-	Aog (sq. ft.)	Vi (cu. ft.)	Ri	GCpi+	GCPi-
Enclosed Buildings	0.18	-0.18	60	5,000,000	1.00	0.18	-0.18

External Pressure Coefficients, GCp, Figure 30.3-2 (roof) and Figure 30.3-1 (walls)

Zone	Area (sq. ft.)	Angle (deg)	GCp+	GCp-	GCp R. O.
1'	1.00	0.00	0.30	-0.90	-1.70
1	1.00	0.00	0.30	-1.70	0.00
2	1.00	0.00	0.30	-2.30	-2.30
3	1.00	0.00	0.30	-3.20	-3.20
4	7.50	All	1.00	-1.10	-
5	7.50	All	1.00	-1.40	-

Values of GCp for walls (zone 4 & 5) were reduced by 10%

Design Wind Pressure, p, Equation 30.3-1.

Zone	qh (psf)	GCp+	GCp-	GCpi+	GCpi-	p1+ (psf)	p2+ (psf)	p1- (psf)	p2- (psf)
1'	25.95	0.30	-0.90	0.18	-0.18	3.11	12.46	3.11	-18.69
1	25.95	0.30	-1.70	0.18	-0.18	3.11	12.46	-48.79	-39.45
2	25.95	0.30	-2.30	0.18	-0.18	3.11	12.46	-64.37	-55.02
3	25.95	0.30	-3.20	0.18	-0.18	3.11	12.46	-87.72	-78.38
4	25.95	1.00	-1.10	0.18	-0.18	21.28	30.63	-33.22	-23.88
5	25.95	1.00	-1.40	0.18	-0.18	21.28	30.63	-41.01	-31.66

Positive and negative values of external and internal pressures are combined to determine four possible pressures:

p1+ uses GCp+ and GCpi+ *p1- uses GCp- and GCpi+*

p2+ uses GCp+ and GCpi- *p2- uses GCp- and GCpi-*

Roof Overhang Pressure, p, Equation 30.9-1.

Wind pressures acting on the roof overhang (soffit pressures not included).

Zone	qh (psf)	GCp- (R.O.)	GCpi+	GCpi-	p1- (psf)	p2- (psf)
1'	25.95	-1.70	0.18	-0.18	-48.79	-39.45
1	25.95	0.00	0.18	-0.18	-4.67	4.67
2	25.95	-2.30	0.18	-0.18	-64.37	-55.02
3	25.95	-3.20	0.18	-0.18	-87.72	-78.38

ELROD ENGINEERING
871 Sevens Oaks Blvd. Suite 220
Smyrna, TN 37167
800-553-5111

Design Code:	IBC 2018/ASCE 7-16	
Wind Speed:	115mph	
Risk Categ:	II	
Exposure:	C	
Wind Pressure:	31.3	PSF
Design Wind Pressure:	18.8	PSF (31.26psf+0.6W=18.756psf)
Letter Weight:	10.0	PSF (10psf+1.0W=10psf)

Project #:	100z4517	Wall Sign
Date:	9/9/2021	
Facility Ref:	Embassy Suites	
Address:	710 Demonbreun St.	
	Nashville, TN	

Sign A7

LETTER	Area (sf)	% of Load	Pressure (psf)	Shape factor	Force (lbs)	Letter Weight
Wall Sign	33.18	100%	18.8	1	622.38	331.83

Fastener/Anchor Type				Tension	Shear	ASD or LRFD	
1/2"ø A36 Thru-Bolts				4271	2277	ASD	
LETTER	Allowable Tension(lbs)	Actual Tension Per Bolt(lbs)	Allowable Shear(lbs)	Actual Shear Per Bolt (lbs)	# Fasteners	Combined Tension/Shear Check	
Wall Sign	4271	38.90	2277	20.74	16.00	0.018	< 1.00 OK

Elrod Engineering q

Project :	Embassy Suites	**File :**	100x4517
Subject :	A7: Hanging Sign	**Date :**	9/3/2021
Location :	Nashville, TN	**Eng :**	dlr

Desgin Wind Pressure, p, Equation 30.3-1 (ASCE 7-16).

System Type	Structure Type	Equation
Components and Cladding (Envelope Procedure)	Low-Rise Buildings with h <= 60 ft Gabled & Hipped Roofs	*p* : qh[(GCp) – (GCpi)] qh : velocity pressure at h GCp : Figures 30.3-1 & 30.3-2 GCpi : Table 26.13-1

Velocity Pressure Calculations:

Velocity pressure qh is calculated in accordance with section 26.10.

qh = Velocity pressure @ mean roof height (h)

qh = Constant · Kh · Kzt · Kd · V ² (Eq 26.10-1)

Where : Constant	=	Numerical Constant	(Section C26.10)
	=	½ · [(Air density lb/ cu ft) / (32.2 ft/s²)] · [(mi/h)(5280 ft/mi) · (1 hr/3600 s)] ²	
	=	0.00256	
Mean Sea Level	=	0.00 ft	
Air Density @MSL	=	0.0765 lb/cu ft	(Table C26.9-1)
Occupancy Category	=	II	(Table 1.5-1)
Exposure Category	=	C	(Section 26.7.3)
α	=	9.50	(Table 26.11-1)
Zg	=	900.00 ft	(Table 26.11-1)
Basic Wind Speed	=	115.00 mph	(Figure 26.5-1&2 A-D)
Mean Roof Height	=	23.00 ft	
Where : Kh	=	Velocity pressure coefficient @ height h	
	=	2.01·(Z/Zg) ^ (2/α) for 15 ft <= Z <= Zg	(Table 26.10-1)
	=	2.01 · (15/Zg) ^ (2/α) for Z < 15 ft	
	=	0.93	
Kzt	=	Topographic factor	(Figure 26.8-1)
	=	(1 + K1 · K2 · K3) ²	
Topography	=	None	
Kzt @h	=	1.00	
Kd	=	Wind directionality factor	(Table 26.6-1)
	=	0.85	
qh	=	26.73 (psf)	

Elrod Engineering q

Project :	Embassy Suites	**File :**	100x4517
Subject :	A7: Hanging Sign	**Date :**	9/3/2021
Location :	Nashville, TN	**Eng :**	dlr

Internal Pressure Coefficient, GCpi, Table 26.11-1

Enclosure Classification	GCpi+	GCPi-	Aog (sq. ft.)	Vi (cu. ft.)	Ri	GCpi+	GCPi-
Enclosed Buildings	0.18	-0.18	60	5,000,000	1.00	0.18	-0.18

External Pressure Coefficients, GCp, Figure 30.3-2 (roof) and Figure 30.3-1 (walls)

Zone	Area (sq. ft.)	Angle (deg)	GCp+	GCp-	GCp R. O.
1'	1.00	0.00	0.30	-0.90	-1.70
1	1.00	0.00	0.30	-1.70	0.00
2	1.00	0.00	0.30	-2.30	-2.30
3	1.00	0.00	0.30	-3.20	-3.20
4	45.00	All	0.88	-0.98	-
5	45.00	All	0.88	-1.17	-

Values of GCp for walls (zone 4 & 5) were reduced by 10%

Design Wind Pressure, p, Equation 30.3-1.

Zone	qh (psf)	GCp+	GCp-	GCpi+	GCpi-	p1+ (psf)	p2+ (psf)	p1- (psf)	p2- (psf)
1'	26.73	0.30	-0.90	0.18	-0.18	3.21	12.83	3.21	-19.24
1	26.73	0.30	-1.70	0.18	-0.18	3.21	12.83	-50.25	-40.63
2	26.73	0.30	-2.30	0.18	-0.18	3.21	12.83	-66.29	-56.67
3	26.73	0.30	-3.20	0.18	-0.18	3.21	12.83	-90.34	-80.72
4	26.73	0.88	-0.98	0.18	-0.18	18.83	28.46	-31.13	-21.51
5	26.73	0.88	-1.17	0.18	-0.18	18.83	28.46	-36.07	-26.44

Positive and negative values of external and internal pressures are combined to determine four possible pressures:

p1+ uses GCp+ and GCpi+ *p1- uses GCp- and GCpi+*

p2+ uses GCp+ and GCpi- *p2- uses GCp- and GCpi-*

Roof Overhang Pressure, p, Equation 30.9-1.

Wind pressures acting on the roof overhang (soffit pressures not included).

Zone	qh (psf)	GCp- (R.O.)	GCpi+	GCpi-	p1- (psf)	p2- (psf)
1'	26.73	-1.70	0.18	-0.18	-50.25	-40.63
1	26.73	0.00	0.18	-0.18	-4.81	4.81
2	26.73	-2.30	0.18	-0.18	-66.29	-56.67
3	26.73	-3.20	0.18	-0.18	-90.34	-80.72

10024517
EMBASSY SUITES
NASHVILLE, TN
B1 BLADE SIGN

BENDING CHECK ON FLANGE OF L6×6×3/8

$$Z = \frac{bd^2}{4} = \frac{17(.375^2)}{4} = 0.5977$$

$$M_n = 36(0.5977) = 21.52$$

$$\phi M_n = 0.9(21.52) = \underline{19.37^{K\text{-}FT}}$$

MOMENT FROM LOAD ON PLATE CALC = $22.49^{K\text{-}FT}$ SHEAR = $4.54^{K\text{-}FT}$

$$22.49^{K\text{-}FT}(12") = \frac{265.68}{16} = \frac{16.61}{4} = 4.153^{K} \text{ (TENSION PER BOLT)}$$

1¼"Ø F3125 GR A325 BOLTS ALLOWABLE TENSION + SHEAR

TENSION = 82.8 SHEAR = 44.2

COMBINED TENSION + SHEAR CHECK

$$\frac{22.49^{K}}{82.8^{K}} + \frac{4.54^{K}}{44.2^{K}}$$

$$0.2716^{K} + 0.1027^{K} = \underline{0.3743} < 1.0 \text{ O.K.}$$

37.4% USE 1¼"Ø F3125 GR A325 BOLTS

$$M_u = 4.153^{K}(1.33\bar{3}FT) = 5.536^{K\text{-}FT} < 19.37$$

28%

Elrod Engineering, LLC

Project :	Embassy Suites	**File :**	100z4517
Subject :	B1 - 84'-0" OAH Wall Sign	**Date :**	9/8/2021
Location :	Nashville, TN	**Eng :**	BLR

Desgin Wind Pressure, p, Equation 30.5-1 (ASCE 7-16).

System Type	Structure Type	Equation
Components and Cladding Envelope Procedure	Buildings with h > 60 ft	*p* : q·(GCp) - qi·(GCpi) q : external velocity pressure qi : internal velocity pressure Gcp : Figure 30.5-1 GCpi : Table 26.13-1

Velocity Pressure Calculations:

Velocity pressure is calculated in accordance with section 26.10.

qz = Velocity pressure @ height (z)

qz = Constant · Kz · Kzt · Kd · V ² (Eq 26.10-1)

Where : Constant	=	Numerical Constant	(Section C26.10)
	=	½ · [(Air density lb/ cu ft) / (32.2 ft/s²)] · [(mi/h)(5280 ft/mi) · (1 hr/3600 s)] ²	
	=	0.00256	
Mean Sea Level	=	0.00 ft	
Air Density @MSL	=	0.0765 lb/cu ft	(Table C26.9-1)
Occupancy Category	=	II	(Table 1.5-1)
Exposure Category	=	C	(Section 26.7.3)
α	=	9.50	(Table 26.11-1)
Zg	=	900.00 ft	(Table 26.11-1)
Basic Wind Speed	=	115.00 mph	(Figure 26.5-1&2 A-D)
Mean Roof Height	=	300.00 ft	
Kh	=	Velocity pressure coefficient @ height h	
	=	2.01·(Z/Zg) ^ (2/α) for 15 ft <= Z <= Zg	(Table 26.10-1)
	=	2.01 · (15/Zg) ^ (2/α) for Z < 15 ft	
	=	1.59	
Kz at highest opening	=	Not Used	
	=		
Kzt	=	Topographic factor	(Figure 26.8-1)
	=	(1 + K1 · K2 · K3) ²	
Topography	=	None	
Kzt @h	=	1.00	
Kd	=	Wind directionality factor	(Table 26.6-1)
	=	0.85	
qh	=	45.90 (psf)	

Elrod Engineering, LLC

Project :	Embassy Suites	**File :**	100z4517
Subject :	B1 - 84'-0" OAH Wall Sign	**Date :**	9/8/2021
Location :	Nashville, TN	**Eng :**	BLR

Internal Pressure Coefficient, GCpi, Table 26.11-1

Enclosure Classification	GCpi+	GCPi-	Aog (sq. ft.)	Vi (cu. ft.)	Ri	GCpi+	GCPi-
Open buildings	0.00	0.00	60	5,000,000	1.00	0.00	0.00

External Pressure Coefficient, GCp, Figure 30.5-1. and Figure 30.4-2B

Zone	Area (sq. ft.)	Angle (deg)	GCp+	GCp-
1	756.00	23.00	0.30	-0.86
2	756.00	23.00	0.30	-1.20
3	756.00	23.00	0.30	-2.00
4	756.00	All	0.60	-0.70
5	756.00	All	0.60	-1.00
1 - Overhang	756.00	23.00		NA
2 - Overhang	756.00	23.00		-2.20
3 - Overhang	756.00	23.00		-2.50

Design Wind Pressure, p. (psf) , Equation 30.5-1 and Equation 30.9-1 for Overhangs.

Negative Wall and Roof Pressures

Zone	q = qh (psf)	qi+ = qh (psf)	qi- = qh (psf)	GCp-	GCpi+	GCpi-	p+ (psf)	p- (psf)
1	45.90	45.90	45.90	-0.86	0.00	0.00	-39.46	-39.46
2	45.90	45.90	45.90	-1.20	0.00	0.00	-55.08	-55.08
3	45.90	45.90	45.90	-2.00	0.00	0.00	-91.80	-91.80
4	45.90	45.90	45.90	-0.70	0.00	0.00	-32.13	-32.13
5	45.90	45.90	45.90	-1.00	0.00	0.00	-45.90	-45.90
1 - Overhang	45.90	45.90	45.90	NA	0.00	0.00	NA	NA
2 - Overhang	45.90	45.90	45.90	-2.20	0.00	0.00	-100.98	-100.98
3 - Overhang	45.90	45.90	45.90	-2.50	0.00	0.00	-114.75	-114.75

p+ uses GCpi+ *p- uses GCpi-*

Positive Roof Pressures

Zone	q = qh (psf)	qi+ = qh (psf)	qi- = qh (psf)	GCp+	GCpi+	GCpi-	p+ (psf)	p- (psf)
1	45.90	45.90	45.90	0.30	0.00	0.00	13.77	13.77
2	45.90	45.90	45.90	0.30	0.00	0.00	13.77	13.77
3	45.90	45.90	45.90	0.30	0.00	0.00	13.77	13.77

Elrod Engineering, LLC

Project :	Embassy Suites	**File :**	100z4517
Subject :	B1 - 84'-0" OAH Wall Sign	**Date :**	9/8/2021
Location :	Nashville, TN	**Eng :**	BLR

Design Windward Wall Wind Pressures, p, Equation 30.5-1 for Zone 4.

p+ uses GCpi+ *p- uses GCpi-*

Heights (feet)	Kz	Kzt	kd	q = qz (psf)	qi+ = qh (psf)	qi- = qh (psf)	GCp	GCpi+	GCpi-	p+ (psf)	p- (psf)
250.01 - 300.00	1.59	1.00	0.85	45.90	45.90	45.90	0.60	0.00	0.00	27.54	27.54
200.01 - 250.00	1.53	1.00	0.85	44.17	45.90	45.90	0.60	0.00	0.00	26.50	26.50
180.01 - 200.00	1.46	1.00	0.85	42.14	45.90	45.90	0.60	0.00	0.00	25.29	25.29
160.01 - 180.00	1.43	1.00	0.85	41.22	45.90	45.90	0.60	0.00	0.00	24.73	24.73
140.01 - 160.00	1.40	1.00	0.85	40.21	45.90	45.90	0.60	0.00	0.00	24.13	24.13
120.01 - 140.00	1.36	1.00	0.85	39.10	45.90	45.90	0.60	0.00	0.00	23.46	23.46
100.01 - 120.00	1.32	1.00	0.85	37.85	45.90	45.90	0.60	0.00	0.00	22.71	22.71
90.01 - 100.00	1.27	1.00	0.85	36.42	45.90	45.90	0.60	0.00	0.00	21.85	21.85
80.01 - 90.00	1.24	1.00	0.85	35.62	45.90	45.90	0.60	0.00	0.00	21.37	21.37
70.01 - 80.00	1.21	1.00	0.85	34.75	45.90	45.90	0.60	0.00	0.00	20.85	20.85
60.01 - 70.00	1.17	1.00	0.85	33.79	45.90	45.90	0.60	0.00	0.00	20.27	20.27
50.01 - 60.00	1.14	1.00	0.85	32.71	45.90	45.90	0.60	0.00	0.00	19.62	19.62
40.01 - 50.00	1.09	1.00	0.85	31.48	45.90	45.90	0.60	0.00	0.00	18.89	18.89
30.01 - 40.00	1.04	1.00	0.85	30.03	45.90	45.90	0.60	0.00	0.00	18.02	18.02
25.01 - 30.00	0.98	1.00	0.85	28.27	45.90	45.90	0.60	0.00	0.00	16.96	16.96
20.01 - 25.00	0.95	1.00	0.85	27.20	45.90	45.90	0.60	0.00	0.00	16.32	16.32
15.01 - 20.00	0.90	1.00	0.85	25.95	45.90	45.90	0.60	0.00	0.00	15.57	15.57
0.00 - 15.00	0.85	1.00	0.85	24.43	45.90	45.90	0.60	0.00	0.00	14.66	14.66

Elrod Engineering, LLC

Project :	Embassy Suites	**File :**	100z4517
Subject :	B1 - 84'-0" OAH Wall Sign	**Date :**	9/8/2021
Location :	Nashville, TN	**Eng :**	BLR

Design Windward Wall Wind Pressures, p, Equation 30.5-1 for Zone 5.

p+ uses GCpi+ *p- uses GCpi-*

Heights (feet)	Kz	Kzt	kd	q = qz (psf)	qi+ = qh (psf)	qi- = qh (psf)	GCp	GCpi+	GCpi-	p+ (psf)	p- (psf)
250.01 - 300.00	1.59	1.00	0.85	45.90	45.90	45.90	0.60	0.00	0.00	27.54	27.54
200.01 - 250.00	1.53	1.00	0.85	44.17	45.90	45.90	0.60	0.00	0.00	26.50	26.50
180.01 - 200.00	1.46	1.00	0.85	42.14	45.90	45.90	0.60	0.00	0.00	25.29	25.29
160.01 - 180.00	1.43	1.00	0.85	41.22	45.90	45.90	0.60	0.00	0.00	24.73	24.73
140.01 - 160.00	1.40	1.00	0.85	40.21	45.90	45.90	0.60	0.00	0.00	24.13	24.13
120.01 - 140.00	1.36	1.00	0.85	39.10	45.90	45.90	0.60	0.00	0.00	23.46	23.46
100.01 - 120.00	1.32	1.00	0.85	37.85	45.90	45.90	0.60	0.00	0.00	22.71	22.71
90.01 - 100.00	1.27	1.00	0.85	36.42	45.90	45.90	0.60	0.00	0.00	21.85	21.85
80.01 - 90.00	1.24	1.00	0.85	35.62	45.90	45.90	0.60	0.00	0.00	21.37	21.37
70.01 - 80.00	1.21	1.00	0.85	34.75	45.90	45.90	0.60	0.00	0.00	20.85	20.85
60.01 - 70.00	1.17	1.00	0.85	33.79	45.90	45.90	0.60	0.00	0.00	20.27	20.27
50.01 - 60.00	1.14	1.00	0.85	32.71	45.90	45.90	0.60	0.00	0.00	19.62	19.62
40.01 - 50.00	1.09	1.00	0.85	31.48	45.90	45.90	0.60	0.00	0.00	18.89	18.89
30.01 - 40.00	1.04	1.00	0.85	30.03	45.90	45.90	0.60	0.00	0.00	18.02	18.02
25.01 - 30.00	0.98	1.00	0.85	28.27	45.90	45.90	0.60	0.00	0.00	16.96	16.96
20.01 - 25.00	0.95	1.00	0.85	27.20	45.90	45.90	0.60	0.00	0.00	16.32	16.32
15.01 - 20.00	0.90	1.00	0.85	25.95	45.90	45.90	0.60	0.00	0.00	15.57	15.57
0.00 - 15.00	0.85	1.00	0.85	24.43	45.90	45.90	0.60	0.00	0.00	14.66	14.66

ELROD ENGINEERING
871 Sevens Oaks Blvd. Suite 220
Smyrna, TN 37167
800-553-5111

Design Code:	IBC 2018/ASCE 7-16	
Wind Speed:	115mph	
Risk Categ:	II	
Exposure:	C	
Wind Pressure:	27.7	PSF
Design Wind Pressure:	16.6	PSF (27.68psf+0.6W=16.608psf)
Letter Weight:	10.0	PSF (10psf+1.0W=10psf)

Project #:	100z4517	Wall Sign
Date:	9/9/2021	
Facility Ref:	Embassy Suites	
Address:	710 Demonbreun St.	
	Nashville, TN	

Sign C1

LETTER	Area (sf)	% of Load	Pressure (psf)	Shape factor	Force (lbs)	Letter Weight
Wall Sign	369.50	100%	16.6	1	6136.66	3695.00

Fastener/Anchor Type				Tension	Shear	ASD or LRFD	
1"ø F3125 GrA325 Thru-Bolts				53000	28300	LRFD	
LETTER	Allowable Tension(lbs)	Actual Tension Per Bolt(lbs)	Allowable Shear(lbs)	Actual Shear Per Bolt (lbs)	# Fasteners	Combined Tension/Shear Check	
Wall Sign	53000	2556.94	28300	923.75	4.00	0.081	< 1.00 OK

Elrod Engineering q

Project :	Embassy Suites	**File :**	100z4517
Subject :	C1: Wall Sign	**Date :**	9/8/2021
Location :	Nashville, TN	**Eng :**	BLR

Desgin Wind Pressure, p, Equation 30.3-1 (ASCE 7-16).

System Type	Structure Type	Equation
Components and Cladding (Envelope Procedure)	Low-Rise Buildings with h <= 60 ft Gabled & Hipped Roofs	*p* : qh[(GCp) – (GCpi)] qh : velocity pressure at h GCp : Figures 30.3-1 & 30.3-2 GCpi : Table 26.13-1

Velocity Pressure Calculations:

Velocity pressure qh is calculated in accordance with section 26.10.

qh = Velocity pressure @ mean roof height (h)

qh = Constant · Kh · Kzt · Kd · V ² (Eq 26.10-1)

Where : Constant	=	Numerical Constant	(Section C26.10)
	=	½ · [(Air density lb/ cu ft) / (32.2 ft/s²)] · [(mi/h)(5280 ft/mi) · (1 hr/3600 s)] ²	
	=	0.00256	
Mean Sea Level	=	0.00 ft	
Air Density @MSL	=	0.0765 lb/cu ft	(Table C26.9-1)
Occupancy Category	=	II	(Table 1.5-1)
Exposure Category	=	C	(Section 26.7.3)
α	=	9.50	(Table 26.11-1)
Zg	=	900.00 ft	(Table 26.11-1)
Basic Wind Speed	=	115.00 mph	(Figure 26.5-1&2 A-D)
Mean Roof Height	=	60.00 ft	
Where : Kh	=	Velocity pressure coefficient @ height h	
	=	2.01·(Z/Zg) ^ (2/α) for 15 ft <= Z <= Zg	(Table 26.10-1)
	=	2.01 · (15/Zg) ^ (2/α) for Z < 15 ft	
	=	1.14	
Kzt	=	Topographic factor	(Figure 26.8-1)
	=	(1 + K1 · K2 · K3) ²	
Topography	=	None	
Kzt @h	=	1.00	
Kd	=	Wind directionality factor	(Table 26.6-1)
	=	0.85	
qh	=	32.71 (psf)	

Elrod Engineering q

Project :	Embassy Suites	**File :**	100z4517
Subject :	C1: Wall Sign	**Date :**	9/8/2021
Location :	Nashville, TN	**Eng :**	BLR

Internal Pressure Coefficient, GCpi, Table 26.11-1

Enclosure Classification	GCpi+	GCPi-	Aog (sq. ft.)	Vi (cu. ft.)	Ri	GCpi+	GCPi-
Enclosed Buildings	0.18	-0.18	60	5,000,000	1.00	0.18	-0.18

External Pressure Coefficients, GCp, Figure 30.3-2 (roof) and Figure 30.3-1 (walls)

Zone	Area (sq. ft.)	Angle (deg)	GCp+	GCp-	GCp R. O.
1	369.50	23.00	0.30	-0.80	-1.80
2e	369.50	23.00	0.30	-0.80	-1.80
2n	369.50	23.00	0.30	-1.20	-2.20
2r	369.50	23.00	0.30	-1.20	-2.20
3e	369.50	23.00	0.30	-1.80	-2.30
3r	369.50	23.00	0.30	-1.20	-1.70
4	369.50	All	0.72	-0.82	-
5	369.50	All	0.72	-0.85	-

Design Wind Pressure, p, Equation 30.3-1.

Zone	qh (psf)	GCp+	GCp-	GCpi+	GCpi-	p1+ (psf)	p2+ (psf)	p1- (psf)	p2- (psf)
1	32.71	0.30	-0.80	0.18	-0.18	3.92	15.70	-32.05	-20.28
2e	32.71	0.30	-0.80	0.18	-0.18	3.92	15.70	-32.05	-20.28
2n	32.71	0.30	-1.20	0.18	-0.18	3.92	15.70	-45.14	-33.36
2r	32.71	0.30	-1.20	0.18	-0.18	3.92	15.70	-45.14	-33.36
3e	32.71	0.30	-1.80	0.18	-0.18	3.92	15.70	-64.76	-52.99
3r	32.71	0.30	-1.20	0.18	-0.18	3.92	15.70	-45.14	-33.36
4	32.71	0.72	-0.82	0.18	-0.18	17.77	29.54	-32.81	-21.04
5	32.71	0.72	-0.85	0.18	-0.18	17.77	29.54	-33.57	-21.79

Positive and negative values of external and internal pressures are combined to determine four possible pressures:

p1+ uses GCp+ and GCpi+ *p1- uses GCp- and GCpi+*

p2+ uses GCp+ and GCpi- *p2- uses GCp- and GCpi-*

Roof Overhang Pressure, p, Equation 30.9-1.

Wind pressures acting on the roof overhang (soffit pressures not included).

Zone	qh (psf)	GCp- (R.O.)	GCpi+	GCpi-	p1- (psf)	p2- (psf)
1	32.71	-1.80	0.18	-0.18	-64.76	-52.99
2e	32.71	-1.80	0.18	-0.18	-64.76	-52.99
2n	32.71	-2.20	0.18	-0.18	-77.84	-66.07
2r	32.71	-2.20	0.18	-0.18	-77.84	-66.07
3e	32.71	-2.30	0.18	-0.18	-81.12	-69.34
3r	32.71	-1.70	0.18	-0.18	-61.49	-49.72

ELROD ENGINEERING
871 Sevens Oaks Blvd. Suite 220
Smyrna, TN 37167
800-553-5111

Design Code:	IBC 2018/ASCE 7-16	
Wind Speed:	115mph	
Risk Categ:	II	
Exposure:	C	
Wind Pressure:	27.4	PSF
Design Wind Pressure:	16.5	PSF (27.44psf+0.6W=16.464psf)
Letter Weight:	10.0	PSF (10psf+1.0W=10psf)

Project #:	100z4517	Wall Sign
Date:	9/9/2021	
Facility Ref:	Embassy Suites	
Address:	710 Demonbreun St.	
	Nashville, TN	

Sign C2

LETTER	Area (sf)	% of Load	Pressure (psf)	Shape factor	Force (lbs)	Letter Weight
Wall Sign	178.75	100%	16.5	1	2942.94	1787.50

Fastener/Anchor Type				Tension	Shear	ASD or LRFD	
1"ø F3125 GrA325 Thru-Bolts				53000	28300	LRFD	
LETTER	Allowable Tension(lbs)	Actual Tension Per Bolt(lbs)	Allowable Shear(lbs)	Actual Shear Per Bolt (lbs)	# Fasteners	Combined Tension/Shear Check	
Wall Sign	53000	1226.23	28300	446.88	4.00	0.039	< 1.00 OK

Elrod Engineering q

Project :	Embassy Suites	**File :**	100z4517
Subject :	C2: Wall Sign	**Date :**	9/8/2021
Location :	Nashville, TN	**Eng :**	BLR

Desgin Wind Pressure, p, Equation 30.3-1 (ASCE 7-16).

System Type	Structure Type	Equation
Components and Cladding (Envelope Procedure)	Low-Rise Buildings with h <= 60 ft Gabled & Hipped Roofs	*p* : qh[(GCp) – (GCpi)] qh : velocity pressure at h GCp : Figures 30.3-1 & 30.3-2 GCpi : Table 26.13-1

Velocity Pressure Calculations:

Velocity pressure qh is calculated in accordance with section 26.10.

qh = Velocity pressure @ mean roof height (h)

qh = Constant · Kh · Kzt · Kd · V ² (Eq 26.10-1)

Where : Constant	=	Numerical Constant	(Section C26.10)
	=	½ · [(Air density lb/ cu ft) / (32.2 ft/s²)] · [(mi/h)(5280 ft/mi) · (1 hr/3600 s)] ²	
	=	0.00256	
Mean Sea Level	=	0.00 ft	
Air Density @MSL	=	0.0765 lb/cu ft	(Table C26.9-1)
Occupancy Category	=	II	(Table 1.5-1)
Exposure Category	=	C	(Section 26.7.3)
α	=	9.50	(Table 26.11-1)
Zg	=	900.00 ft	(Table 26.11-1)
Basic Wind Speed	=	115.00 mph	(Figure 26.5-1&2 A-D)
Mean Roof Height	=	32.00 ft	
Where : Kh	=	Velocity pressure coefficient @ height h	
	=	2.01·(Z/Zg) ^ (2/α) for 15 ft <= Z <= Zg	(Table 26.10-1)
	=	2.01 · (15/Zg) ^ (2/α) for Z < 15 ft	
	=	1.00	
Kzt	=	Topographic factor	(Figure 26.8-1)
	=	(1 + K1 · K2 · K3) ²	
Topography	=	None	
Kzt @h	=	1.00	
Kd	=	Wind directionality factor	(Table 26.6-1)
	=	0.85	
qh	=	28.65 (psf)	

Elrod Engineering q

Project :	Embassy Suites	**File :**	100z4517
Subject :	C2: Wall Sign	**Date :**	9/8/2021
Location :	Nashville, TN	**Eng :**	BLR

Internal Pressure Coefficient, GCpi, Table 26.11-1

Enclosure Classification	GCpi+	GCPi-	Aog (sq. ft.)	Vi (cu. ft.)	Ri	GCpi+	GCPi-
Enclosed Buildings	0.18	-0.18	60	5,000,000	1.00	0.18	-0.18

External Pressure Coefficients, GCp, Figure 30.3-2 (roof) and Figure 30.3-1 (walls)

Zone	Area (sq. ft.)	Angle (deg)	GCp+	GCp-	GCp R. O.
1	178.75	23.00	0.30	-0.93	-1.84
2e	178.75	23.00	0.30	-0.93	-1.84
2n	178.75	23.00	0.30	-1.20	-2.20
2r	178.75	23.00	0.30	-1.20	-2.20
3e	178.75	23.00	0.30	-1.80	-2.30
3r	178.75	23.00	0.30	-1.20	-1.70
4	178.75	All	0.78	-0.88	-
5	178.75	All	0.78	-0.96	-

Design Wind Pressure, p, Equation 30.3-1.

Zone	qh (psf)	GCp+	GCp-	GCpi+	GCpi-	p1+ (psf)	p2+ (psf)	p1- (psf)	p2- (psf)
1	28.65	0.30	-0.93	0.18	-0.18	3.44	13.75	-31.92	-21.60
2e	28.65	0.30	-0.93	0.18	-0.18	3.44	13.75	-31.92	-21.60
2n	28.65	0.30	-1.20	0.18	-0.18	3.44	13.75	-39.54	-29.23
2r	28.65	0.30	-1.20	0.18	-0.18	3.44	13.75	-39.54	-29.23
3e	28.65	0.30	-1.80	0.18	-0.18	3.44	13.75	-56.73	-46.42
3r	28.65	0.30	-1.20	0.18	-0.18	3.44	13.75	-39.54	-29.23
4	28.65	0.78	-0.88	0.18	-0.18	17.16	27.47	-30.34	-20.02
5	28.65	0.78	-0.96	0.18	-0.18	17.16	27.47	-32.60	-22.28

Positive and negative values of external and internal pressures are combined to determine four possible pressures:

p1+ uses GCp+ and GCpi+ *p1- uses GCp- and GCpi+*

p2+ uses GCp+ and GCpi- *p2- uses GCp- and GCpi-*

Roof Overhang Pressure, p, Equation 30.9-1.

Wind pressures acting on the roof overhang (soffit pressures not included).

Zone	qh (psf)	GCp- (R.O.)	GCpi+	GCpi-	p1- (psf)	p2- (psf)
1	28.65	-1.84	0.18	-0.18	-57.83	-47.51
2e	28.65	-1.84	0.18	-0.18	-57.83	-47.51
2n	28.65	-2.20	0.18	-0.18	-68.20	-57.88
2r	28.65	-2.20	0.18	-0.18	-68.20	-57.88
3e	28.65	-2.30	0.18	-0.18	-71.06	-60.75
3r	28.65	-1.70	0.18	-0.18	-53.87	-43.55

ELROD ENGINEERING
871 Sevens Oaks Blvd. Suite 220
Smyrna, TN 37167
800-553-5111

Design Code:	IBC 2018/ASCE 7-16	
Wind Speed:	115mph	
Risk Categ:	II	
Exposure:	C	
Wind Pressure:	90.0	PSF
Design Wind Pressure:	54.0	PSF (89.95psf+0.6W=53.97psf)
Letter Weight:	10.0	PSF (10psf+1.0W=10psf)

Project #:	100z4517	Wall Sign
Date:	9/9/2021	
Facility Ref:	Embassy Suites	
Address:	710 Demonbreun St.	
	Nashville, TN	

Sign C3

LETTER	Area (sf)	% of Load	Pressure (psf)	Shape factor	Force (lbs)	Letter Weight
Wall Sign	26.31	100%	54.0	1	1419.95	263.10

Fastener/Anchor Type				Tension	Shear	ASD or LRFD	
3/4"ø A36 Thru-Bolts				9607	5128	ASD	
LETTER	Allowable Tension(lbs)	Actual Tension Per Bolt(lbs)	Allowable Shear(lbs)	Actual Shear Per Bolt (lbs)	# Fasteners	Combined Tension/Shear Check	
Wall Sign	9607	177.49	5128	32.89	8.00	0.025	< 1.00 OK

Elrod Engineering q

Project :	Embassy Suites	**File :**	100z4517
Subject :	C3: Channel Letter	**Date :**	9/8/2021
Location :	Nashville, TN	**Eng :**	BLR

Desgin Wind Pressure, p, Equation 30.5-1 (ASCE 7-16).

System Type	Structure Type	Equation
Components and Cladding Envelope Procedure	Buildings with h > 60 ft	*p* : q·(GCp) - qi·(GCpi) q : external velocity pressure qi : internal velocity pressure Gcp : Figure 30.5-1 GCpi : Table 26.13-1

Velocity Pressure Calculations:

Velocity pressure is calculated in accordance with section 26.10.

qz = Velocity pressure @ height (z)

qz = Constant · Kz · Kzt · Kd · V ² (Eq 26.10-1)

Where : Constant	=	Numerical Constant	(Section C26.10)
	=	½ · [(Air density lb/ cu ft) / (32.2 ft/s²)] · [(mi/h)(5280 ft/mi) · (1 hr/3600 s)] ²	
	=	0.00256	
Mean Sea Level	=	0.00 ft	
Air Density @MSL	=	0.0765 lb/cu ft	(Table C26.9-1)
Occupancy Category	=	II	(Table 1.5-1)
Exposure Category	=	C	(Section 26.7.3)
α	=	9.50	(Table 26.11-1)
Zg	=	900.00 ft	(Table 26.11-1)
Basic Wind Speed	=	115.00 mph	(Figure 26.5-1&2 A-D)
Mean Roof Height	=	300.00 ft	
Kh	=	Velocity pressure coefficient @ height h	
	=	2.01·(Z/Zg) ^ (2/α) for 15 ft <= Z <= Zg	(Table 26.10-1)
	=	2.01 · (15/Zg) ^ (2/α) for Z < 15 ft	
	=	1.59	
Kz at highest opening	=	Not Used	
	=		
Kzt	=	Topographic factor	(Figure 26.8-1)
	=	(1 + K1 · K2 · K3) ²	
Topography	=	None	
Kzt @h	=	1.00	
Kd	=	Wind directionality factor	(Table 26.6-1)
	=	0.85	
qh	=	45.90 (psf)	

Elrod Engineering q

Project :	Embassy Suites	**File :**	100z4517
Subject :	C3: Channel Letter	**Date :**	9/8/2021
Location :	Nashville, TN	**Eng :**	BLR

Internal Pressure Coefficient, GCpi, Table 26.11-1

Enclosure Classification	GCpi+	GCPi-	Aog (sq. ft.)	Vi (cu. ft.)	Ri	GCpi+	GCPi-
Enclosed Buildings	0.18	-0.18	60	5,000,000	1.00	0.18	-0.18

External Pressure Coefficient, GCp, Figure 30.5-1.

Zone	Area (sq. ft.)	Angle (deg)	GCp+	GCp-
1	26.31	0.00		-1.28
2	26.31	0.00		-2.13
3	26.31	0.00		-2.98
4	26.31	All	0.87	-0.88
5	26.31	All	0.87	-1.73
1 - Overhang	26.31	0.00		-1.66
2 - Overhang	26.31	0.00		-1.66
3 - Overhang	26.31	0.00		-1.96

Design Wind Pressure, p. (psf) , Equation 30.5-1 and Equation 30.9-1 for Overhangs.

Negative Wall and Roof Pressures

Zone	q = qh (psf)	qi+ = qh (psf)	qi- = qh (psf)	GCp-	GCpi+	GCpi-	p+ (psf)	p- (psf)
1	45.90	45.90	45.90	-1.28	0.18	-0.18	-66.85	-50.32
2	45.90	45.90	45.90	-2.13	0.18	-0.18	-105.89	-89.36
3	45.90	45.90	45.90	-2.98	0.18	-0.18	-144.92	-128.40
4	45.90	45.90	45.90	-0.88	0.18	-0.18	-48.79	-32.27
5	45.90	45.90	45.90	-1.73	0.18	-0.18	-87.75	-71.23
1 - Overhang	45.90	45.90	45.90	-1.66	0.18	-0.18	-84.36	-67.84
2 - Overhang	45.90	45.90	45.90	-1.66	0.18	-0.18	-84.36	-67.84
3 - Overhang	45.90	45.90	45.90	-1.96	0.18	-0.18	-98.21	-81.69

p+ uses GCpi+ *p- uses GCpi-*

Elrod Engineering q

Project :	Embassy Suites	**File :**	100z4517
Subject :	C3: Channel Letter	**Date :**	9/8/2021
Location :	Nashville, TN	**Eng :**	BLR

Design Windward Wall Wind Pressures, p, Equation 30.5-1 for Zone 4.

p+ uses GCpi+ *p- uses GCpi-*

Heights (feet)	Kz	Kzt	kd	q = qz (psf)	qi+ = qh (psf)	qi- = qh (psf)	GCp	GCpi+	GCpi-	p+ (psf)	p- (psf)
250.01 - 300.00	1.59	1.00	0.85	45.90	45.90	45.90	0.87	0.18	-0.18	31.87	48.40
200.01 - 250.00	1.53	1.00	0.85	44.17	45.90	45.90	0.87	0.18	-0.18	30.36	46.89
180.01 - 200.00	1.46	1.00	0.85	42.14	45.90	45.90	0.87	0.18	-0.18	28.59	45.11
160.01 - 180.00	1.43	1.00	0.85	41.22	45.90	45.90	0.87	0.18	-0.18	27.78	44.31
140.01 - 160.00	1.40	1.00	0.85	40.21	45.90	45.90	0.87	0.18	-0.18	26.90	43.42
120.01 - 140.00	1.36	1.00	0.85	39.10	45.90	45.90	0.87	0.18	-0.18	25.92	42.45
100.01 - 120.00	1.32	1.00	0.85	37.85	45.90	45.90	0.87	0.18	-0.18	24.83	41.36
90.01 - 100.00	1.27	1.00	0.85	36.42	45.90	45.90	0.87	0.18	-0.18	23.59	40.11
80.01 - 90.00	1.24	1.00	0.85	35.62	45.90	45.90	0.87	0.18	-0.18	22.89	39.41
70.01 - 80.00	1.21	1.00	0.85	34.75	45.90	45.90	0.87	0.18	-0.18	22.13	38.65
60.01 - 70.00	1.17	1.00	0.85	33.79	45.90	45.90	0.87	0.18	-0.18	21.28	37.81
50.01 - 60.00	1.14	1.00	0.85	32.71	45.90	45.90	0.87	0.18	-0.18	20.34	36.86
40.01 - 50.00	1.09	1.00	0.85	31.48	45.90	45.90	0.87	0.18	-0.18	19.26	35.79
30.01 - 40.00	1.04	1.00	0.85	30.03	45.90	45.90	0.87	0.18	-0.18	18.00	34.52
25.01 - 30.00	0.98	1.00	0.85	28.27	45.90	45.90	0.87	0.18	-0.18	16.46	32.98
20.01 - 25.00	0.95	1.00	0.85	27.20	45.90	45.90	0.87	0.18	-0.18	15.53	32.05
15.01 - 20.00	0.90	1.00	0.85	25.95	45.90	45.90	0.87	0.18	-0.18	14.43	30.96
0.00 - 15.00	0.85	1.00	0.85	24.43	45.90	45.90	0.87	0.18	-0.18	13.10	29.62

Elrod Engineering q

Project :	Embassy Suites	**File :**	100z4517
Subject :	C3: Channel Letter	**Date :**	9/8/2021
Location :	Nashville, TN	**Eng :**	BLR

Design Windward Wall Wind Pressures, p, Equation 30.5-1 for Zone 5.

p+ uses GCpi+ *p- uses GCpi-*

Heights (feet)	Kz	Kzt	kd	q = qz (psf)	qi+ = qh (psf)	qi- = qh (psf)	GCp	GCpi+	GCpi-	p+ (psf)	p- (psf)
250.01 - 300.00	1.59	1.00	0.85	45.90	45.90	45.90	0.87	0.18	-0.18	31.87	48.40
200.01 - 250.00	1.53	1.00	0.85	44.17	45.90	45.90	0.87	0.18	-0.18	30.36	46.89
180.01 - 200.00	1.46	1.00	0.85	42.14	45.90	45.90	0.87	0.18	-0.18	28.59	45.11
160.01 - 180.00	1.43	1.00	0.85	41.22	45.90	45.90	0.87	0.18	-0.18	27.78	44.31
140.01 - 160.00	1.40	1.00	0.85	40.21	45.90	45.90	0.87	0.18	-0.18	26.90	43.42
120.01 - 140.00	1.36	1.00	0.85	39.10	45.90	45.90	0.87	0.18	-0.18	25.92	42.45
100.01 - 120.00	1.32	1.00	0.85	37.85	45.90	45.90	0.87	0.18	-0.18	24.83	41.36
90.01 - 100.00	1.27	1.00	0.85	36.42	45.90	45.90	0.87	0.18	-0.18	23.59	40.11
80.01 - 90.00	1.24	1.00	0.85	35.62	45.90	45.90	0.87	0.18	-0.18	22.89	39.41
70.01 - 80.00	1.21	1.00	0.85	34.75	45.90	45.90	0.87	0.18	-0.18	22.13	38.65
60.01 - 70.00	1.17	1.00	0.85	33.79	45.90	45.90	0.87	0.18	-0.18	21.28	37.81
50.01 - 60.00	1.14	1.00	0.85	32.71	45.90	45.90	0.87	0.18	-0.18	20.34	36.86
40.01 - 50.00	1.09	1.00	0.85	31.48	45.90	45.90	0.87	0.18	-0.18	19.26	35.79
30.01 - 40.00	1.04	1.00	0.85	30.03	45.90	45.90	0.87	0.18	-0.18	18.00	34.52
25.01 - 30.00	0.98	1.00	0.85	28.27	45.90	45.90	0.87	0.18	-0.18	16.46	32.98
20.01 - 25.00	0.95	1.00	0.85	27.20	45.90	45.90	0.87	0.18	-0.18	15.53	32.05
15.01 - 20.00	0.90	1.00	0.85	25.95	45.90	45.90	0.87	0.18	-0.18	14.43	30.96
0.00 - 15.00	0.85	1.00	0.85	24.43	45.90	45.90	0.87	0.18	-0.18	13.10	29.62

ELROD ENGINEERING
871 Sevens Oaks Blvd. Suite 220
Smyrna, TN 37167
800-553-5111

Design Code:	IBC 2018/ASCE 7-16	
Wind Speed:	115mph	
Risk Categ:	II	
Exposure:	C	
Wind Pressure:	32.8	PSF
Design Wind Pressure:	19.7	PSF (32.77psf+0.6W=19.662psf)
Letter Weight:	10.0	PSF (10psf+1.0W=10psf)

Project #:	100z4517	Blade Sign
Date:	9/9/2021	
Facility Ref:	Embassy Suites	
Address:	710 Demonbreun St.	
	Nashville, TN	

Sign C4

LETTER	Area (sf)	% of Load	Pressure (psf)	Shape factor	Force (lbs)	Letter Weight
Blade Sign	24.50	100%	19.7	1	481.72	245.00

Fastener/Anchor Type				Tension	Shear	ASD or LRFD	
1/2"ø A36 Thru-Bolts				4271	2277	ASD	
LETTER	Allowable Tension(lbs)	Actual Tension Per Bolt(lbs)	Allowable Shear(lbs)	Actual Shear Per Bolt (lbs)	# Fasteners	Combined Tension/Shear Check	
Blade Sign	4271	60.21	2277	30.63	8.00	0.028	< 1.00 OK

Elrod Engineering q

Project :	Embassy Suites	**File :**	100z4517
Subject :	C4: Blade Letter	**Date :**	9/8/2021
Location :	Nashville, TN	**Eng :**	BLR

Desgin Wind Pressure, p, Equation 30.3-1 (ASCE 7-16).

System Type	Structure Type	Equation
Components and Cladding (Envelope Procedure)	Low-Rise Buildings with h <= 60 ft Gabled & Hipped Roofs	*p* : qh[(GCp) – (GCpi)] qh : velocity pressure at h GCp : Figures 30.3-1 & 30.3-2 GCpi : Table 26.13-1

Velocity Pressure Calculations:

Velocity pressure qh is calculated in accordance with section 26.10.

qh = Velocity pressure @ mean roof height (h)

qh = Constant · Kh · Kzt · Kd · V ² (Eq 26.10-1)

Where : Constant	=	Numerical Constant	(Section C26.10)
	=	½ · [(Air density lb/ cu ft) / (32.2 ft/s²)] · [(mi/h)(5280 ft/mi) · (1 hr/3600 s)] ²	
	=	0.00256	
Mean Sea Level	=	0.00 ft	
Air Density @MSL	=	0.0765 lb/cu ft	(Table C26.9-1)
Occupancy Category	=	II	(Table 1.5-1)
Exposure Category	=	C	(Section 26.7.3)
α	=	9.50	(Table 26.11-1)
Zg	=	900.00 ft	(Table 26.11-1)
Basic Wind Speed	=	115.00 mph	(Figure 26.5-1&2 A-D)
Mean Roof Height	=	20.00 ft	
Where : Kh	=	Velocity pressure coefficient @ height h	
	=	2.01·(Z/Zg) ^ (2/α) for 15 ft <= Z <= Zg	(Table 26.10-1)
	=	2.01 · (15/Zg) ^ (2/α) for Z < 15 ft	
	=	0.90	
Kzt	=	Topographic factor	(Figure 26.8-1)
	=	(1 + K1 · K2 · K3) ²	
Topography	=	None	
Kzt @h	=	1.00	
Kd	=	Wind directionality factor	(Table 26.6-1)
	=	0.85	
qh	=	25.95 (psf)	

Elrod Engineering q

Project :	Embassy Suites	**File :**	100z4517
Subject :	C4: Blade Letter	**Date :**	9/8/2021
Location :	Nashville, TN	**Eng :**	BLR

Internal Pressure Coefficient, GCpi, Table 26.11-1

Enclosure Classification	GCpi+	GCPi-	Aog (sq. ft.)	Vi (cu. ft.)	Ri	GCpi+	GCPi-
Enclosed Buildings	0.18	-0.18	60	5,000,000	1.00	0.18	-0.18

External Pressure Coefficients, GCp, Figure 30.3-2 (roof) and Figure 30.3-1 (walls)

Zone	Area (sq. ft.)	Angle (deg)	GCp+	GCp-	GCp R. O.
1	24.50	23.00	0.44	-1.45	-1.98
2e	24.50	23.00	0.44	-1.45	-1.98
2n	24.50	23.00	0.44	-2.07	-2.74
2r	24.50	23.00	0.44	-2.07	-2.74
3e	24.50	23.00	0.44	-2.31	-2.98
3r	24.50	23.00	0.44	-2.07	-2.97
4	24.50	All	0.93	-1.03	-
5	24.50	All	0.93	-1.26	-

Design Wind Pressure, p, Equation 30.3-1.

Zone	qh (psf)	GCp+	GCp-	GCpi+	GCpi-	p1+ (psf)	p2+ (psf)	p1- (psf)	p2- (psf)
1	25.95	0.44	-1.45	0.18	-0.18	6.85	16.19	-42.24	-32.90
2e	25.95	0.44	-1.45	0.18	-0.18	6.85	16.19	-42.24	-32.90
2n	25.95	0.44	-2.07	0.18	-0.18	6.85	16.19	-58.39	-49.05
2r	25.95	0.44	-2.07	0.18	-0.18	6.85	16.19	-58.39	-49.05
3e	25.95	0.44	-2.31	0.18	-0.18	6.85	16.19	-64.58	-55.24
3r	25.95	0.44	-2.07	0.18	-0.18	6.85	16.19	-58.39	-49.05
4	25.95	0.93	-1.03	0.18	-0.18	19.50	28.84	-31.44	-22.09
5	25.95	0.93	-1.26	0.18	-0.18	19.50	28.84	-37.44	-28.10

Positive and negative values of external and internal pressures are combined to determine four possible pressures:

p1+ uses GCp+ and GCpi+ *p1- uses GCp- and GCpi+*

p2+ uses GCp+ and GCpi- *p2- uses GCp- and GCpi-*

Roof Overhang Pressure, p, Equation 30.9-1.

Wind pressures acting on the roof overhang (soffit pressures not included).

Zone	qh (psf)	GCp- (R.O.)	GCpi+	GCpi-	p1- (psf)	p2- (psf)
1	25.95	-1.98	0.18	-0.18	-56.19	-46.84
2e	25.95	-1.98	0.18	-0.18	-56.19	-46.84
2n	25.95	-2.74	0.18	-0.18	-75.66	-66.32
2r	25.95	-2.74	0.18	-0.18	-75.66	-66.32
3e	25.95	-2.98	0.18	-0.18	-81.96	-72.61
3r	25.95	-2.97	0.18	-0.18	-81.79	-72.45